TABLE OF CONTENTS

PART I – GENERAL INFORMATION

A. Purpose
B. Definitions
C. Responsibility
D. Regulations of other agencies

PART II – ADMINISTRATIVE POLICIES

A. General
B. Plans and Specifications
C. Dedication
D. Easements
E. As-built plans
F. Liability
G. Regulations and ordinances of other agencies
H. Inspection

PART III – GENERAL CONDITIONS

A. General Information
B. Safety of Public
C. Protection of existing facilities
D. Separation of water and sewer lines
E. Pipeline installation under existing public highways
F Pipeline installation under existing railroads
G Blasting
H Restoration
I Erosion Control
J Utilities within streets of planned developments

PART IV – WORK ASSOCIATED WITH WATER LINE CONSTRUCTION

A. General Information
B. Design Criteria
C. Water line construction
D. Water pipe material and jointing
E. Valves and accessories
F. Meter boxes and meter vaults, water meters
G Water service laterals
H Blow-off assemblies
I Air relief valve assemblies
J Fire hydrant specification
K Acceptable tests
L Disinfection

PART V – STREET CONSTRUCTION & STORM DRAIN DESIGN

PART VI – RESTORATION OF PAVEMENT

A. Scope of Work
B. Restoration of pavement
C. Maintenance of restored pavement

PART VII – CONCRETE

A. General Requirements
B. Materials
C. Slump
D. Testing
E. Forms
F. Placing reinforcement
G. Delivery of concrete
H. Concrete placement
I. Vibration
J. Construction joints
K. Surface finishing
L. Protection and curing

PART VIII – CLEARING, GRUBING AND EROSION CONTROL

PART IX – SKETCHS AND DETAILS

PART I

GENERAL INFORMATION

A. PURPOSE

The construction specifications of the Town of Gordonsville cover general terms of contracts and material specifications for water utilities to be incorporated into the Town.

Requests for additional information or clarification shall be directed to the Town Manager or his designee.

No statement or regulation contained in this publication shall be construed to interfere with any additional requirements which may be imposed by the Virginia Department of Health (VDH), Virginia Department of Transportation (VDOT), or Orange County.

In the event of any deviation between these specifications and applicable rules and regulations of the VDH, VDOY or the County of Orange, it shall be understood that the rules and regulations of said agencies shall prevail.

B. DEFINITIONS

Unless the context specifically indicates otherwise, the meaning of terms used herein shall be as follows:

AASHTO - American Association of State Highway Transportation Officials.

ANSI - American National Standards Institute.

ASCE - American Society of Civil Engineers.

ACI – American Concrete Institute

ASTM – American Society for Testing and Materials

AWWA - American Water Works Association.

Town of Gordonsville - The Town of Gordonsville, including its governing and operating bodies and designated agents. Any office referred to solely by title (e.g., Town Foreman, Town Engineer) shall be the person retained in this position by the Town of Gordonsville.

As-Built - Construction plans and details that have been edited after construction to reflect accurate locations and features of all appurtenant utilities.

Construction Approval - A document issued by the Town to a developer which authorizes him to construct facilities for which the design plans and specifications have been approved by the Town.

Contractor - Any person(s), firm, group or affiliates responsible for constructing the facilities described in the Town's *Public Facilities Manual*.

DEQ – Virginia Department of Environmental Quality (formerly SWCB).

Developer - Any person, firm, corporation or association having an interest in constructing improvements to alter the use of land. Of particular interest to these specifications are developers constructing facilities to be dedicated to public use within the jurisdictional area of the Town.

OSHA - Occupational Safety & Health Administration.

Public Sewer - A sewer in which all owners of abutting properties have equal rights, and which is controlled by the Rapidan Service Authority.

Sanitary Sewage - That water carried waste which derives principally from dwellings, business buildings, institutions, industrial establishments and the like, exclusive of any storm and surface waters.

Sanitary Sewer - A sewer that has its use limited to sanitary sewage and to which storm, surface and ground waters are not intentionally admitted.

Sewage Works - All facilities for collecting, pumping, treating and disposing of sewage.

Shall or Will - Indicate mandatory actions; may is permissive.

VDH - Virginia Department of Health.

VDOT - Virginia Department of Transportation.

VMRC - Virginia Marine Resources Commission.

C. RESPONSIBILITY

The Town of Gordonsville is responsible to enforce these regulations and standards to ensure development of utilities in accordance with these specifications.

The developer is responsible to employ reliable contractors with sufficient skills and experience to perform all work in an acceptable manner relative to the facilities herein described. Failure to do so may result in work stoppage and/or refusal by the Town of Gordonsville to accept the project as part of its system. It is recommended on large projects that the developer and/or consultant hold a preliminary conference with the Town of Gordonsville regarding the project prior to its design phase.

The contractor is responsible to ensure the safe and proper construction of the facilities herein mentioned. If any person is in doubt as to the true meaning of any part of these specifications, a written request shall be submitted to the Town of Gordonsville for interpretation. Any questions concerning the standards shall be governed by the final decision of the Town of Gordonsville.

The consultant is responsible for design and submission of the proper number of plans and specifications for the proposed work.

The Town of Gordonsville reserves the right to make adjustments in types of materials and methods of construction required, should field inspections reveal unforeseen and/or unfavorable conditions for installation of the utilities.

All work relative to connecting the systems shall be performed by the contractor or Town of Gordonsville work forces. All related costs shall be the responsibility of the contractor and/or developer, unless specifically preempted by a formal contractual arrangement.

D. REGULATIONS OF OTHER AGENCIES

In addition to the regulations herein, utility designs shall comply with the following:

1. The Commonwealth of Virginia, State Board of Health Waterworks Regulations, effective November 15, 1997 or most current edition.

3. Local and State Building Codes and Ordinances.

4. Any utility crossing navigable streams must meet the requirements of the Army Corp of Engineers, Department of Environmental Quality, and Virginia Marine Resources Commission. A joint permit application should be made to VMRC for review by these agencies.

PART II

ADMINISTRATIVE POLICIES

A. GENERAL

This section outlines the procedural requirements for submission of public improvement and utility plans and specifications to the Town of Gordonsville. Requirements of other regulating agencies are included by reference.

B. PLANS AND SPECIFICATIONS

1. Submittal

Any developer proposing to construct streets, storm drain facilities, water lines or sanitary sewerage systems for public use and dedication to the Town of Gordonsville shall submit plans and specifications for review to the appropriate agency. Submittals are subject to "engineering review fees" assessed upon completion of review.

In accordance with the provisions of the Code of Virginia, drawings, specifications, and engineer's reports submitted for approval shall be prepared by or under the supervision of a registered professional engineer or others legally qualified to practice in Virginia. The front sheet of each set of drawings shall bear the imprint of the seal, and signature, of the responsible registered professional and all following sheets shall bear the imprint or a legible facsimile of such seal. A cover letter shall be submitted with each set of plans and specifications giving a description of the work.

Plan sheets shall not exceed 30" x 42" in size.

2. Engineering Review Fees

Plan review fees are billed based on the current appropriate ordinances, and can be obtained by calling the Town Office.

3. Review

The Town’s goal will be to review plans within sixty (60) days after receipt.

4. Approval

Following review and approval, plans and specifications shall be marked "approved" and returned with a letter of approval. Approval is for basic compliance with the Construction Specifications. "Approval" does not relieve the owner, developer, contractor or owner's consultant from responsibility for their work.

C. DEDICATION

Upon completion of construction of utilities to be dedicated to the Town the developer must dedicate the utilities to the town as stated herein. A letter of dedication stating the terms of dedication must be submitted. Upon final inspection and approval of the facilities and satisfaction of all dedication requirements the Town will accept the facilities in writing. The developer will be responsible for any maintenance as a result of construction or defects of said facilities for one (1) year from the date of acceptance.

D. EASEMENTS

Easements shall be required for all storm drains and storm water management facilities, water lines, sewer lines, and appurtenances except where installed within a public right-of-way. If the utility is placed within the outer ten (10) feet of right-of-way, additional private easements shall be provided to allow ten (10) feet from the center of any utility. Such easements shall not be less than twenty (20) feet in width centered on the main. Combined pipeline easements shall not be less than thirty (30) feet in width with mains separated a minimum of ten (10) feet from each other and a minimum of ten (l0) feet from the edges of the easement. The Town of Gordonsville reserves the right to require additional easement width if construction and maintenance activities require it. All easements shall have the right of ingress and egress fully provided for in the recorded deed. Where deemed necessary by the Town of Gordonsville, easements shall extend to adjacent property for orderly extensions of service.

All appurtenances (blow-offs, hydrants, etc.) shall be provided with an easement twenty (20) feet by twenty (20) feet centered on the appurtenances and ten (10) feet from the centerline of the interconnecting piping. Easements shall be corrected to reflect the as-built conditions and shall be submitted with the final dedication package. (See figure TOG-PFM-01)

No building or permanent structure shall be constructed within the easement. No trees, shrubs, structures, fences or obstacles shall be placed within an easement which would render the easement inaccessible by equipment. Any person who constructs a structure within the utility easement shall be liable for the cost of removal and any damage to the utility.

E. AS-BUILT PLANS

As-Built construction plans shall be maintained by the contractor in the field. These shall be provided to the Owner or his representative to serve as the basis for the final "As-Built" plans.

Along with the as-built drawings, the developer or his consultant shall provide seamless digital planimetric maps in a *.PDF format. The digital file shall include all planimetric information within the project limits. Offsite utilities shall be referenced to the project coordinates.

One set of blue (or black)-line "As-Built" plans shall be provided to the Town by the owner or his representative. The "As-Built" plans shall be made available for use within thirty (30) days after final inspection. "As-Built" plans shall be defined as substantially in compliance with approved plans and shall indicate actual physical construction. All plan preparation, printing and duplicating cost shall be borne by the owner.

F. LIABILITY

The Town of Gordonsville shall have no liability resulting from any reason whatsoever in connection with the construction, installation, or testing of any utility lines or systems.

G. REGULATIONS & ORDINANCES OF OTHER AGENCIES

All developers and builders should be familiar with all policies, ordinances, and laws that involve the Town of Gordonsville, VDH, DEQ, VDOT, VMRC, Orange County, and State Building and Fire Codes. Specifically noted are rules governing cross connections and backflow prevention.

H. INSPECTION

An inspector from the Town of Gordonsville will be assigned to each project to ensure that all work is completed and materials are installed in compliance with these specifications. During the course of construction the inspector will report to the Town Foreman on progress of the work. Any deviation from the approved drawing must be approved by the Town before incorporation into the work. The Town of Gordonsville shall be permitted access to the construction work at any time for inspection of work and construction methods.

PART III

GENERAL CONDITIONS

A. GENERAL INFORMATION

This section outlines miscellaneous conditions for water line construction.

B. SAFETY OF PUBLIC

Construction operations shall be scheduled so as to interfere as little as possible with public travel, whether vehicular or pedestrian. Whenever it is necessary to cross or interfere with roads, driveways, and walks, whether public or private, suitable and safe bridges, detours, or other temporary provisions for the accommodation of public and private travel shall be provided and maintained. Reasonable notice shall be given to owners of private driveways before disturbing the driveway. The contractor shall designate a safety officer from his staff to be responsible for his operation.

C. PROTECTION OF EXISTING FACILITIES

All construction operations in the vicinity of other existing facilities shall be performed with great care to prevent damage to these facilities. Prior to construction operations all utility companies shall be requested to verify location of their utilities in the field. Any damaged utility shall be repaired with new materials and restored to its original condition.

In accordance with the Underground Utility Damage Prevention Act and specifically Section 56-265.17 of the Virginia Code, no person shall begin or make excavation or demolition without making required notification.

"Miss Utility" of Virginia is the notification control center and can be reached at 1-800-552-7001 for most utilities. Forty-eight (48) hours notice is required.

It shall be the Contractor's responsibility to conduct the work in such a manner as to avoid damage to or interference with utilities. If damage or interruption of service occurs as a result of his work, it is the Contractor's responsibility to promptly notify the inspector and the utility and to repair or correct it immediately at his own expense and to the satisfaction of the Town of Gordonsville and owner of the utility.

D. SEPARATION OF WATER AND SEWER LINES

There shall be no physical connection between a drinking water supply line and a sewer or appurtenance.

No sewer line shall pass within one hundred (l00) feet of a potable water supply well or other potable water supply source or structure unless special construction and/or pipe materials are used to obtain adequate protection.

Water lines shall be laid at least ten (l0) feet horizontally from a sewer or sewer manhole whenever possible; the distance shall be measured edge-to-edge. When local conditions prevent a horizontal separation of ten (l0) feet, the water line may be laid closer to a sewer or sewer manhole provided that:

1. The bottom (invert) of the water main shall be at least eighteen (l8) inches above the top (crown) of the sewer.

2. Where this vertical separation cannot be obtained, the sewer shall be constructed of approved Ductile Iron water pipe, pressure tested in place without leakage prior to backfilling.

3. The sewer manhole shall be of watertight construction and tested in place.

Water lines crossing sewers shall be laid to provide a separation of at least eighteen (18) inches between the bottom of the water line and the top of the sewer whenever possible. When local conditions prevent this vertical separation, the following construction shall be used:

1. Sewers passing over or under water lines shall be constructed of approved Ductile Iron water pipe.

2. Water lines passing under sewers shall, in addition, be protected by providing:

3. A vertical separation of at least eighteen (l8)inches between the bottom of the sewer and the top of the water line;

4. Adequate structural support for the sewers to prevent excessive deflection of the joints and the settling on and breaking of the water line;

5. That the length of the water line be centered at the point of the crossing so that joints shall be equidistant and as far as possible from the sewer.

No water pipe shall pass through or come in contact with any part of a sewer manhole.

E. PIPELINE INSTALLATION UNDER EXISTING PUBLIC HIGHWAYS

1. General

Work outside Town limits, within highway rights-of-way shall be subject to VDOT approval. No work will be authorized by the Town of Gordonsville that has not been approved by VDOT. Specifications of VDOT governing work within public highway rights-of-way shall govern this work. Where there is a conflict between the VDOT specifications and these specifications, the more stringent requirement shall apply.

Construction operations in public streets, roads, or alleys shall be confined to as small a working space as practical so as not to cause undue inconvenience to the public or to adjacent properties. At the time of undertaking the work, the contractor shall notify the Town twenty-four (24) hours in advance of construction. (See figure TOG-PFM-02)

2. Pipeline Installation

Main water distribution lines and sanitary sewer lines under existing public highways shall be installed by open cutting if approved. If not approved, they shall be installed inside a spiral-welded steel casing pipe with a minimum thickness of one-quarter (1/4) inch. The casing pipe shall be installed by boring and jacking, and shall extend between the edges of the right-of-way.

The steel casing pipe shall be no less than twice the diameter of the carrier pipe for water installations and no less than three times the diameter of the carrier pipe for sewer installations. All carrier pipe installed in steel casings shall be ductile iron and shall be supported with steel casing spacers as manufactured by Advance Product Systems, Inc., or Cascade, or approved equal.

Bore and jacking of pipe or tunneling under pavement shall be done only upon prior written approval by the Town. If any pipe is installed in this manner, the contractor shall submit a detailed schedule of operation and shall show the equipment and the exact method to be used. Only workmen skilled in this class of work shall be employed in it.

3. Pavement & Shoulder Replacement

All new utility line construction shall include the replacement of all pavement and curbs and gutters, sidewalks or shoulders and ditches removed or damaged by the contractor during the course of construction. All work replaced shall match the existing work as nearly as practicable. Materials to be replaced shall be approximately 1-1/2 times the thickness of those removed and shall be in accordance with the Virginia Department of Transportation Road and Bridge Specifications, dated January, 1994 or current revision.

F. PIPELINE INSTALLATION UNDER EXISTING RAILROADS

Local railway companies require permits for any construction within the confines of their right-of-way limits or properties. All requirements relative to design and construction must be met prior to approval by the Town. Notice or verification of meeting such requirements shall be submitted to the Town with the construction plans. (See figure TOG-PFM-03)

G. BLASTING

Blasting, where required, shall be done with care in accordance with all applicable Federal, State, and local laws, ordinances, rules and regulations of the authorities having jurisdiction and by licensed, skilled and experienced blasters.

All Federal, State, and local regulations governing construction safety shall be adhered to and any violation of such regulations shall be deemed the sole responsibility of the contractor and/or developer.

Precautions shall be taken to prevent injury to persons and damage to property. No blasting shall be done within twenty-five (25) feet of any completed work or adjacent to any other structures unless proper precautions are taken. Ends of utility lines adjacent to the blasting area shall be covered to protect the utilities from debris and damage.

Proper notification shall be given to the Town and the public prior to the commencement of blasting operations.

Blasting on Saturdays, Sundays, and holidays will be permitted only with special written permission from the Town.

Whenever blasting will be undertaken in the vicinity of an existing utility, it shall only be done with direct "onsite" supervision of the Town. Any damage as a result of blasting operations shall be the sole responsibility of the contractor and/or developer.

H. RESTORATION

The Contractor shall restore all surfaces disturbed by his operations to a condition at least equal to that which existed prior to commencement of the work. Restoration work shall be commenced immediately following the completion of the work on any section of the project. All drainage structures shall be restored using like materials and details.

All ditches shall be restored to the prior existing grade and cross section. All pavement, walks, curbs, gutters, and entrances removed or damaged by the Contractor shall be replaced to equal or better condition.

All streets, roads, and highways shall be restored as required by the Town of Gordonsville and VDOT.

Work performed on private property shall be confined to the easements obtained and the area shall be seeded or sodded. Landscaping, fences or other improvements shall be restored, where applicable, to their original condition.

The contractor shall be responsible for all restoration necessary as a result of his operations for the period of one (1) year following acceptance of the work by the Town.

I. EROSION CONTROL

An Erosion Control Plan shall be submitted as necessary to the Orange County for their review.

J. UTILITIES WITHIN STREETS OF PLANNED DEVELOPMENTS

Utilities to be installed in planned subdivisions may be installed within streets, subject to approval of VDOT, where such streets are to be dedicated to VDOT for public use.

Waterlines will be allowed under the pavement (5 feet from the outside edge of the pavement or 7 feet from the face of curb) on undivided roadways. This guideline will be recognized unless, as determined by the Town of Gordonsville, there are compelling design or safety issues which would demand consideration of an alternate location.

Waterlines greater than 24 inches in diameter under the pavement parallel with the roadway alignment will be reviewed on a case-by-case basis.

PART IV

WORK ASSOCIATED WITH WATER LINE CONSTRUCTION

A. GENERAL INFORMATION

Any new water system to be connected to the public supply shall not be constructed until final plans are approved by the Town of Gordonsville. The Town shall be furnished for review three (3) sets of plans and specifications prepared by a Registered Engineer certified to do business in the State of Virginia. Plans shall be in sufficient detail to accurately indicate all pertinent design and construction details for a comprehensive interpretation of the work to be performed. Plans shall be reviewed for compliance with the following standards as have been adopted by the Town.

B. DESIGN CRITERIA

1. *Pipe Size:* All main distribution pipe lines shall be of a size to adequately serve all the needs of the proposed subdivision or water system, but in any event shall not be less than six (6) inches (nominal size) in diameter except as may otherwise be permitted herein.

   The minimum size of the pipe where fire protection is to be provided or required shall be six (6) inches in diameter. If more than one (l) fire hydrant is required, then the minimum line size shall be eight (8) inches or the system shall be reinforced using a grid system layout. Dead-ends shall be minimized by looping all mains. Where dead-ends are necessary they shall be provided with a fire hydrant, or blow-off assembly. The nominal pipe diameter of water mains without fire hydrants shall not be less than four (4) inches. Hydraulic calculations for sizing the water system must be submitted to the Town for review.

2. *Flow Requirements:* All distribution systems shall be capable of providing a flow of three (3) gallons per minute per connection at a minimum working pressure of 20 psi at each service connection, plus the required fire flow as determined by the County Fire Official.

3. *Depth of Cover:* Water pipe shall be laid with a cover of forty-four (44”) inches measured from established finished grade to the top of the pipe. The contractor shall establish adequate elevation control to ensure that upon final grading a minimum of forty-four (44”) inches of cover over waterlines has been maintained. It shall be the contractor's responsibility and expense to verify the cover at any location questioned by the Town. Any potential changes in alignment or grade of roadways shall be considered in the original utility design. Loss of adequate cover will necessitate relocation or lowering of the waterline. Every effort shall be made to maintain the finished grade so as to not exceed a trench depth of 5 feet.

4. *Gate Valve Locations:* Approved gate valves shall be installed at all pipe junctions and street intersections in such a manner as to control and cut off flows in all segments of the system. Three (3) valves are required at crosses on systems, two (2) valves at tees; the valves are to be placed on the smaller lines at each cross and tee location, unless otherwise approved by the Town. In other areas gate valves will be required every 1000 feet, except as may otherwise be approved by the Town. No gate valve shall be located under a concrete storm gutter or sidewalk. Additional valves

may be required under certain circumstances, such as in looped systems, where it is necessary to isolate certain sections of the system.

5. *Crossing Water Courses:* Waterlines intended to cross streams, rivers, or other surface waters, either continuous or intermittent flows, present special problems and should be discussed with the Town and the State Health Department before final plans are prepared. Only under extraordinary conditions will above ground crossings be approved by the Town. The waterline is to be installed a minimum of three (3) feet under the stream or riverbed and be of special construction having flexible watertight joints. Valves shall be provided at both ends of the water crossing so that the section can be isolated for tests or repairs; the valves shall be easily accessible and not subject to flooding. Permanent one-inch (1") taps shall be made for testing and locating leaks at each end of the water crossing. Ductile iron water pipe, Class 52, shall be used. (See figure TOG-PFM-04)

   Specific requirements of the Army Corp of Engineers, DEQ, and/or VMRC may apply to any stream crossing. A joint permit application may be filed with VMRC for review of these agencies.

6. *Constructing Under Culverts & Storm Drains:* The Town shall require a minimum separation from open-ended culverts of three (3) feet without insulation. The type of insulation and the method of application shall conform to the manufacturer's published recommendation.

   The minimum distance between waterlines and storm drainage appurtenances where crossing shall be eighteen (18) inches.

C. WATER LINE CONSTRUCTION

Construction of water lines and appurtenances shall be in accordance with the approved plans and specifications. The Town shall insist that good workmanship and standard waterline construction principles apply in the work in order that the finished project may qualify on final inspection for acceptance into the Town water system.

1. *Handling of Materials:* Pipe, fittings, valves, hydrants, and accessories shall be loaded and unloaded by lifting with hoists or skidding so as to avoid shock or damage. Under no circumstances shall they be dropped. Pipe shall not be skidded or rolled against pipe already on the ground. Pipe shall be handled so that the coating and lining shall not be damaged.

2. *Pipe Laying:* The water mains shall be laid and maintained to the required lines and grades with fittings, valves, hydrants, and accessories set at the required locations as indicated on the approved plans. All valves and hydrant stems shall be set plumb. Wherever obstructions not shown on plans are encountered during progress of the work, the Town or its representative shall be advised. If any deviation is contemplated from that shown on the plans approved by the Town, details shall be submitted for review and approval before construction. Verbal approval may be granted for minor alterations. Major alterations will require written approval. No water main shall terminate under a curb, gutter, ditch or storm drainage structure.

3. *Tapping Water Lines:* All tap connections to existing lines shall be accomplished with Town forces unless otherwise approved.

(a) *Tapping PVC, Transite or DI Pipe:* The following procedures are required when tapping existing PVC, transite or ductile iron water lines:

- Taps shall be located at least eighteen (l8) inches from the joint.
- Tapping procedures shall be in accordance with the manufacturer's published recommendations.
- Tapping sleeves and valves shall be used on four (4) inch or larger taps. Romac tapping sleeves and Kennedy tapping valves.

(b) *Special Requirements For Tapping PVC & Transite Pipe:* The following procedures are required when tapping existing PVC or transite pipe water lines:

- Only one tap shall be located in a common line parallel to the longitudinal axis.
- When multiple taps are necessary on the same length of pipe they shall be located on slightly different planes and separated by at least three (3) feet.
- The pipe shall be tapped only when the temperatures fall within the following range limits:
- Temperature Limits for Tapping PVC Pipe
- Connection Minimum Maximum
- Dry Taps 0° F (-18° C) 100° F (38° C)
- Wet Taps 32° F (0° C) 90° F (32° C)
- No taps shall be made where the pipe is discolored.
- Saddles shall be used on all taps. Romac 202's saddle must be used unless otherwise approved by the Town.
- Tapping sleeves on PVC or transite waterlines shall be supported by a concrete pad, cast in-place, prior to the tap being made. A concrete thrust block shall also be provided behind the tapping sleeve.

4. *Excavation and Laying of Pipe:*

(a) *Excavation:* Pipe line construction shall be made by open cut unless otherwise specified or required. During the excavation operations, material suitable for backfilling shall be piled in an orderly manner a sufficient distance from the banks of the trench to avoid overloading and to prevent slides or cave-ins.

All open trenches shall be adequately shored and braced to provide a safe working environment. Trench boxes shall be made available onsite and utilized in accordance with appropriate OSHA standards. It is the contractor's responsibility to comply with the requirements of OSHA as pertaining to men working in an open trench.

All excavated material not suitable for backfill shall be removed and disposed of in an acceptable manner. Grading shall be done as may be necessary to prevent water from flowing into trenches or other excavations, and any water accumulating therein shall be removed by approved methods.

The trenches in which the pipe is to be laid shall be opened in accordance with the approved plans so pipe can be laid to the alignment and depth required. The exposed end of all pipes

shall be fully closed by means of an approved stopper to prevent earth or other substances from entering the pipe which may interfere with the disinfection process. All waterlines shall be laid true to line and grade. The pipe and trench shall be kept free of water during the laying operation. Not more than one hundred (l00) feet of trench shall be opened in advance of the completed waterline when located along streets or highways, and not more than two hundred (200) feet at other locations.

(b) *Construction in Fill Areas:* Where pipelines are to be installed in fill areas, the fill shall be compacted to 85% - 90% outside of roads and 100% within the roadway of the optimum density as determined by AASHTO T-99 to an elevation not less than thirty-six (36) inches above the pipe bells before excavation begins for the pipe trench. Certification shall be required of all compaction in fill areas, at intervals as directed by the Town. This certification shall be signed by a professional geologist or professional engineer and shall state the exact area the certification applies to.

Hydrants, valves and other appurtenances shall not be located in fill.

(c) *Trench Width:* The trench width shall be as narrow as is practicable to permit the pipe to be laid and joined properly, and to permit the backfill to be placed and compacted properly. In general, the clear width of the trench at an elevation of 1'-0" above the top of the pipe shall be approximately equal to the external diameter of the pipe plus sixteen inches (16"), or in accordance with the trench widths specified for various types and sizes of pipe. The provisions of this section shall not relieve the contractor from responsibility to ensure all trenching methods are in accordance with the appropriate safety requirements of the applicable OSHA regulations.

(d) *Rock Excavation:* Where rock is encountered in trench excavation, whether solid or in the form of loose rock, shale, or large boulders, it shall be removed by blasting or other approved methods to the extent that no projection of rock shall be nearer than six (6) inches to any part of the water pipe, valves and fittings when laid, nor project beyond the lines and grades of structures. No blasting shall be done within twenty-five (25) feet of any completed work or adjacent to any other structure unless proper precautions are taken. Ends of water line adjacent to blasting shall be covered to avoid receiving debris. No rock or asphalt over six-inches (6") in any dimension shall be placed in the trench and in no case shall rock or asphalt be placed closer than two (2) feet vertically to the installed pipe.

(e) *Overexcavation:* Where the excavation has been carried too deep, the Contractor shall refill the over-excavated trench with VDOT 21A stone to within 6” of the bottom of pipe to create a stable bedding foundation. Following establishment of a stable subgrade bed pipe in No. 26.

(f) *Pipe Installation:* When installing pipe in the trench, proper implements, tools, and facilities satisfactory to the Town and as recommended by the material manufacturer shall be provided and used by the Contractor for the safe and convenient prosecution of the work. All pipe, valves, fittings, hydrants, and accessories shall be carefully lowered into the trench piece by piece by means of a derrick, ropes, slings, or other suitable tools or equipment in such a manner

as to prevent damage to the water main materials and any protective coatings and linings. Under no circumstances shall water main materials be dropped or dumped into the trench.

Ductile iron pipe shall be installed in accordance with ANSI/AWWA C-600-93 or current revision. (See figure TOG-PFM-05)

(g) *Condition of Pipe:* All lumps, blisters and excess coal tar coating shall be removed from the ends of each pipe. The outside of the spigot and the inside of the bell shall be thoroughly cleaned and dried, and be free from oil and grease before the pipe is joined.

(h) *Special Precautions:* The contractor shall visually examine each joint of pipe to prevent foreign material from entering the pipe while it is being placed in the trench. During the laying operations, no debris, tools, clothing or other materials shall be placed in the pipe. Water lines shall be plugged at the end of each construction day to prevent foreign matter from entering them.

(i) *Cutting of Pipe:* The cutting of pipe for inserting valves, fittings, or closure pieces shall be done in a neat and workmanlike manner without damage to the pipe or cement lining and so as to leave a smooth end at right angles to the axis of the pipe.

When machine cutting is not available for cutting pipe twenty (20) inches in diameter or larger, the electric-arc cutting method will be permitted using a carbon or steel rod. Only qualified and experienced workmen shall be used on this work. The flame cutting of pipe by means of an acetylene torch shall not be allowed.

(j) *Pipe Deflection:* Wherever it is necessary to deflect the pipe from a straight line, either in vertical or horizontal plane, to avoid obstructions or to plumb the line for valve installation, or where long-radius curves are permitted, the amount of deflection allowed shall not exceed that required for satisfactory jointing of the pipes, as specified by the manufacturer. The following table shall be used as a guideline. In no case shall these limits be exceeded.

(k) *Longitudinal Bending of Ductile Iron Pipe:*

Pipe Size	Minimum allowed per 18' length Radius (ft)	Offset per 18' Length (in)
4	205	19
6	205	19
8	205	19
10	205	19
12	205	19

5. *Hydrants, Valves, and Fittings Construction:*

(a) *Bracing of Fittings:* All tees, valves, fittings, plugs, caps and fire hydrants shall be substantially braced, blocked and/or anchored to prevent any movement by providing adequate reaction backing. This backing shall be a concrete thrust block with a compressive strength of not less than 2500 psi. Backing shall be placed between solid undisturbed earth and the fitting to be anchored and shall be so placed that pipe and fitting joints will be accessible for repairs. (See figure TOG-PFM-06, 07, and 08)

(b) *Fitting Installations:* Hydrants, valves and valve boxes shall be set plumb, and centered, with valve boxes placed directly over the valves. If possible, valve boxes shall be located outside the area of roads and streets. Earth fill shall be carefully tamped around the valve box to a distance of four (4) feet on all sides of the box, or to the undisturbed trench face if less than four (4) feet.

6. *Pipe Foundation:*

(a) *General:* The trench shall be excavated to a depth required so as to provide a uniform and continuous bearing and support for the pipe. It shall be permissible to disrupt the finished surface of the trench over a maximum length of eighteen (l8) inches near the middle of each length of pipe for the withdrawal of pipe slings or other lifting tackle. The finished subgrade shall be prepared accurately by means of hand tools. Where excavation is made in rock or boulders, the subgrade shall be made by backfilling with six (6) inches of No. 26 Virginia Department of Transportation stone which shall be thoroughly compacted. The bedding material shall extend evenly to the trench wall.

(b) *Foundation in Good Soil:* The bottom of the trench shall be scraped and compacted. All stones shall be removed to insure the pipe doesn't rest on rock, or a four (4) inch bedding of No. 26 Virginia Department of Transportation Stone shall be provided. The bedding material shall extend evenly to the trench wall. Bell holes shall be cut for the proper marking of the joints and to prevent the pipe from resting on the bells.

(c) *Foundation in Poor Soil:* Whenever the soil at the bottom of the trench is soft, unstable or saturated with water, a foundation of granular fill beneath the bedding shall be provided to a depth required to stabilize the soil.

7. *Backfilling and Compaction:*

(a) *General:* All trenches or excavations shall be backfilled to the original surface of the ground or to such other grades as may be shown on the approved plans.

Backfilling shall be subject to the approval of the Town for the type of construction used. All backfilling shall be carried along as speedily as possible, the trench being filled, in general, as soon as the cement, or mortar and masonry are sufficiently set. New trenching will not be permitted when earlier trenches need backfilling or labor is needed to restore the surfaces of streets or other areas to a safe and proper condition.

(b) *Materials:* All material used for backfilling of trenches shall be free of excessive amounts of unsuitable materials such as all organic material, frozen clods, and sticky masses of clay and gumbo which are difficult to properly compact. Backfill material shall contain no rock or asphalt larger than six (6) inches in any dimension and in no case shall rock or asphalt be placed closer than two (2) feet vertically to the installed pipe.

(c) *Backfilling:* Backfill over all pipe to a depth of twenty-four (24) inches shall be carefully placed in layers approximately six (6) inches thick, each layer being thoroughly tamped and compacted by hand or pneumatic tamper in place. Special care shall be taken in using a mechanical tamper directly over the pipe.

Above 24", backfill shall be deposited in 6" layers in traffic areas, 12" layers in non-traffic areas or a thickness which will permit compaction to a density of at least 95% of the maximum density at optimum moisture content as determined by the AASHTO Standard Proctor test (AASHTO Designation T-99) under all proposed traffic areas. Backfill in existing traffic areas shall be in accordance with the Virginia Department of Transportation's standards.

(d) *Compaction:* Unless otherwise shown on the plans, the backfill in all trenches shall be thoroughly compacted. The compacting shall be done by suitable mechanical means. In all cases, special care shall be taken to see that the spaces at the sides of the trench are thoroughly filled and compacted. If necessary, the earth shall be moistened during the operations.

It shall be required that a minimum of one (1) compaction test will be conducted on trench backfill per 400 linear feet of waterline. Compaction tests may be waived by the Town on projects less than 400 linear feet in length. The contractor shall bear the expense of all compaction tests. The location of tests shall be selected in the field by the Town and will not necessarily be limited to regular intervals.

The results of all compaction tests shall be submitted to the Town for review and approval prior to acceptance of construction. The degree of compaction required for trenches in streets and paved areas is 95 percent of maximum density and for trenches in all other areas the required

density shall be ninety percent (90%) of maximum density. If the tests indicate the required density has not been obtained, the contractor shall remove, replace and re-compact the material to the specified density. Failure of any compaction tests may result in additional compaction tests being required.

(e) *Protection of Pipe & Appurtenances:* Backfilling shall be done in such a way as to prevent dropping of material directly on top of the pipe from more than a three (3) foot vertical distance. When placing material from a bucket it must be lowered so that the shock of the falling earth will not damage the water line.

D. WATER PIPE MATERIAL & JOINTING

1. *General Requirements:* All pipe shall be approved by the Town.

Unless otherwise approved in writing by the Town, all water mains and distribution lines shall be of the material herein listed. The Town reserves the right to select the type and/or class material which shall be used from the following list:

(a) *Ductile Iron Pipe & Fittings:* Ductile iron pipe shall be centrifugally cast pipe manufactured in accordance with AWWA/ANSI C151-91/A21.51-91 or current revision. The joints shall be push-on, mechanical or flanged in accordance with AWWA/ANSI C-111-90/A2l.1190. All ductile iron pipe shall have a cement mortar lining in accordance with AWWA/ANSI C104-90/A2l.4-90) or current revision. Ductile iron pipe shall be manufactured by Griffin Pipe Products, Inc., U.S. Pipe and Foundry Co., or approved equal.

The minimum wall thickness for ductile iron pipe shall be the thickness necessary to safely and effectively install corporation stops. Pipe 8" and smaller shall have a minimum wall thickness of 0.31". Pipe 10" and larger shall have a minimum wall thickness of 0.34". Structural requirements for the pipe under field installation shall be used in determining the appropriate class of pipe. Under no circumstances shall the pipe wall thickness be less than that noted above.

Cast iron or ductile iron fittings shall have standard mechanical joints manufactured in accordance with AWWA/ANSI C-110-93/A21.10-93 or current revision. All fittings shall be cement mortar lined inside in accordance with AWWA/ANSI C104-90/A21.4-90 or current revision.

(b) *Galvanized Steel Pipe & Fittings:* Galvanized steel pipe shall conform to ASTM A-l02-77, Schedule 40 or 80 or current revision.

Fittings for galvanized steel pipe shall be galvanized malleable iron in accordance with ASTM A-120-77 or current revision.

Galvanized pipe shall not be used below ground except for blow-off assemblies and where exposed to atmosphere. Galvanized pipe shall not be used under wet conditions in any event, except where special approval of application is given.

(c) *Copper Pipe & Fittings:* Copper pipe for service laterals shall be soft type "k" copper with standard water works flare or compression fittings.

(d) All valves, hydrants, mj fitting, etc., must be secured using Mega lug or grip kit.

2. *Jointing:* Jointing of all pipe shall conform to the manufacturer's published recommendations and specifications. Gaskets for water pipe and fittings shall be vulcanized natural or vulcanized synthetic rubber free of porous areas, foreign material or visible defects. Rubber gaskets shall conform to all applicable provisions of AWWA/ANSI C111/A21.11-90, or current revisions. Gaskets shall be protected from exposure to excessive heat and cold, direct sunlight, ozone (from electric motors and equipment), oil, grease or other contaminants.

E. VALVES & ACCESSORIES

Valves should be “Kennedy” resilient seat, unless otherwise approved.

1. *Gate Valves:* Two (2) inch and smaller gate valves shall be inside screw, solid bronze, tapered seat, double disc construction and rated for 200 psi working pressure. (See figure TOG-PFM-09)

   Larger gate valves shall be resilient seated. The resilient seated type shall be non-rising stem, fully encapsulated wedge in accordance with ANSI/AWWA C509-94 or current revision.

   Gate valves shall be Kennedy and shall open by a counterclockwise rotation of the valve stem with a two (2) inch square operating nut. The operating nut shall be no greater than three (3) feet below finished ground. Operating nuts placed greater than three (3) feet below finished ground shall be equipped with approved operating nut extensions to meet the minimum depth requirement. Gate valves installed in access vaults, pumping stations, etc., shall be equipped with handwheels.

   Gate valves fourteen (l4) inches and larger shall have a working pressure of no less than l50 psi and a test pressure of 300 psi. Four (4) inch to twelve (l2) inch gate valves shall have a working pressure of no less than 200 psi and a test pressure of 400 psi. Gate valves greater than or equal to twelve (12) inches on high pressure systems (greater than 100 psi) shall be provided with gear case and a by-pass. Gate valves shall have one "O" ring above and one "O" ring below the stem thrust collar. The thrust collar shall be lubricated with oil to assure positive operation in opening and closing.

2. *Butterfly Valves:* Butterfly valves shall be designed, manufactured and tested in accordance with the provisions and requirements of ANSI/AWWA C504-94, or current revision, and in accordance with the requirements of these Specifications. All valves shall be drop-tight when subjected to the specified working pressure (differential pressure), and all valves shall be capable of drop-tight seating under bidirectional flow conditions (maximum working pressure applied as differential pressure from either direction).

   Valve bodies shall be constructed of cast (gray)iron ASTM A126-73 Class B, ductile iron ANSI/ASTM A536-80 Grade 65-45-12, or alloy cast iron ANSI-ASTM A436-78 Type 1 or 2 or ANSI/ASTM 439-80 Type D2.

Valve discs shall be solid construction, and shall be stainless steel as specified under Section 2.2.4 of the above referenced AWWA Standard or alloy cast iron ANSI/ASTM A436-78 Type 2. Edges of discs shall be shaped, machined and polished to such configuration as will ensure smooth and even mating with the rubber seat over an acceptable angle of interference (+ 2-1/2 degrees). The disc shall rotate 90 degrees from full open position to tightly closed position.

Valve seats shall be new natural rubber or new synthetic rubber conforming to the requirements of ANSI/AWWA C504-94, or latest revision. Rubber seats shall mate with the seating surfaces of the valve discs specified hereinabove. Rubber seats shall be either bonded in the valve body or mechanically fastened in the valve body. All clamps, retaining rings and fasteners shall be stainless steel specified in the above referenced AWWA Standards.

Valve shafting shall be stainless steel in accordance with the above referenced AWWA Standard, and may be either one-piece through-body-and-disc construction or may be stub-shaft construction. If of stub-shaft construction, each stub-shaft shall be inserted into hubs integral with the valve disc for a distance of at least 1-1/2 times the diameter of the shaft. Lengths of hubs extending from the disc shall be such that the full required insertion can be attained. The connection between the shaft and the disc shall be designed to transmit shaft torque equivalent to at least 75% of the torsional strength of the minimum shaft diameters. Dowel and taper pins, if used, shall be mechanically secured. Any penetrations in the shaft shall be compensated for so that the relationship of transmitted torque to shaft torsional strength will be maintained.

Valve bearings shall be sleeve type, non-corrosive, and of "self-lubricated" materials. Thrust rings and/or bearings shall maintain the disc in designed centered position. Valve shafts shall be designed for connections to operators as required, and shaft seals shall be provided at capped ends and projecting ends.

All valves shall fully meet or exceed the requirements of ANSI/AWWA C504-94, or current revision. The valves shall be furnished in complete accordance with the requirements of Section 5 of ANSI/AWWA C504-94, or current revision.

Valve operators shall be traveling-nut type or geared type designed to withstand 300 ft. lbs. of input torque at fully open or fully closed positions without damage to valve or operator. Operator case shall be fully-enclosed type to prevent entrance of dirt or moisture, and the case shall be grease-packed. Stop-limiting devices shall be provided in the operators for open and closed positions. Travel of the valve shall be indicated on quadrant bolted to the body (exposed valves).

Valves installed in locations accessible from floor or ground shall be equipped with handwheels and valves installed in locations higher than 6'-6" above finished floor or ground shall be equipped with chainwheels and chain. The last stated provisions shall apply except when valves are indicated to be operated through floorstands or benchstands located above the valves, and in such cases valves shall be equipped with enclosed operators, extension stems, floorstands (or benchstands), and indicators.

Valves installed underground shall be equipped with grease packed operators having gasketted covers to prevent entrance of moisture into case when subjected to external hydrostatic pressure of

10 psi; and valves shall be operated through a valve nut mounted on vertical operating shaft extending through top of gear case. Operator extension, valve box, indicator, and cover shall be provided for each valve. Extensions and valve boxes shall be of correct length and height to suit elevation of ground surface. Valve boxes shall be fitted with cast iron covers marked "WATER". All valves shall open "left" (counter-clockwise).

3. *Tapping Valves:* Tapping valves shall meet the same specifications as gate valves, except they shall have a full, unobstructed opening to receive a full size shell cutter. It shall be a standard mechanical joint type on one end and a flanged joint on the other end. A Kennedy or approved equal shall be used.

4. *Tapping Sleeves:* Tapping sleeves shall be split sleeve with mechanical joint type end seals. They shall have the same working and test pressures as noted for the gate valves above. A Romac or approved equal shall be used.

5. *Check Valves:* Check valves shall be designed for l75 psi working pressures and 350 psi test pressures for sizes up to twelve (l2) inches. Check valves from fourteen (l4) inches to twenty-four (24) inches shall have an opening suitable for cleaning without disconnecting from the pipe. They shall have a cast iron body with bronze mountings, discs, arms, and seat rings. Check valves shall conform to the most current revision of the ANSI/AWWA C-508-93 standard.

6. *Detector Check Valves (Private Fire Protection Line):* Private fire line may be required to have a detector check valve installed on the line at a point as close to the main supply line as possible. A Mueller, Hersey or approved equal shall be used if deemed necessary by the Town. This detector check valve shall be installed in a custom-designed vault.

7. *Valve Boxes:* Each valve on underground piping shall be provided with a screw-type adjustable cast iron valve box. They shall have a round shaft (5 1/4 inside diameter), a flared base, and a coat of bituminous paint applied to both surfaces. Also, the head shall be cast iron, round, and have the word "Water" cast on it.

   Valve boxes shall be adjusted flush with the finish grade. If the street surfaces are renewed or replaced by the developer, owner or his representative after the water system has been approved and accepted by the Town, but while such streets are still the obligation of the developer or owner, the valve boxes therein shall be readjusted to the proper finished grade at the developer's or owner's expense. If changes are made in grade at valve boxes by parties other than the developer, owner or his representative after initial construction approval, the cost of this adjustment shall be borne by the party responsible for the construction adjustments. In remote areas, valve boxes shall extend six (6) inches above finished grade and have a witness post securely placed next to the box.

8. *Corporation Stops:* At the location indicated on the plans, corporation stops of sufficient size shall be furnished and installed at the 2 o'clock position of the pipe in accordance with applicable standards and specifications. A Ford or approved equal shall be used. (See figure TOG-PFM-10).

9. Coppersetters: All water meters sized up to, and including one (l) inch, shall be placed in a horizontal inlet and outlet copper meter setter. The setter shall have a multi-purpose connection on

the customer side and a flared or compression connection on the supply side. It shall also have a lock-winged stop on the supply side and a plain stop and dual check valve on the customer side. Ford or approved equal shall be used. Coppersetters shall be installed a minimum of 15" from the top of the meter box for meters 1" or less. Setters for meters greater than 1" and less than 4" shall be installed no less than 18" from the top of the meter vault. Meters 4" and larger shall be installed no less than 36" from the top of the meter vault.

10. *Service Laterals:* Copper pipe for lateral connections shall be soft type "k" copper with standard water works flare or compression fittings.

11. *Concrete Thrust Blocks:* All fittings, plugs, tees, bends, and reducers shall be sufficiently anchored. Concrete shall have bearing on undisturbed earth with bearing area no less than detail shown on the plans.

12. *Marking Tape:* A two (2) inch wide minimum size blue colored non-metallic water marking tape shall be buried at a distance of approximately one (l) foot below ground and directly over all water mains to alert water construction and maintenance crews that a water pipe is below. The marking tape shall be continuous. Marking tape disturbed during the course of construction on existing waterlines shall be restored to its original condition and to the satisfaction of the project inspector.

13. *Conductive Wire:* Conductive wire disturbed during the course of construction shall be restored to its original condition and to the satisfaction of the Town.

F. METER BOXES & METER VAULTS, WATER METERS

1. *Meter Boxes:* Meter boxes shall be installed in non-paved areas except as approved by the Town. The box and lid shall conform to the finished grade after installation. Meter boxes of appropriate size shall be installed around all meter setters as indicated on the plans. 2218 cast lid with pro read, or approved equal can be used. A four (4) inch thick od No, 26 bedding stone shall be provided at the base of all meter boxes for 5/8" and 1" meters. Meter boxes shall be located and installed so as to prevent water, dirt or debris from entering or covering them. If changes in grade at the meter box are made by the owner or customer after initial construction approval, the cost of box adjustment shall be borne by the party responsible for the grade change. Coppersetters shall be placed in the meter boxes a minimum of 15" from the top of the box.

   All meter boxes shall have non-locking cast iron lids and will be used for water meters up to and including one (1) inch in size. Lids shall be provided with a 1-3/4" hole tapped into the lid. Blind taps or plugs shall be provided to prevent debris from entering the box prior to use. The contractor must ensure a clear 1-3/4" opening where the hole is cast into the lid to accommodate a Touch Read sensor. (See figures TOG-PFM-11 & 12).

2. *Water Meters:* Water meters shall be Neptune Pro-read type. All meters shall have straight reading registers that read in U. S. gallons. Meters shall be of a frost proof design, shall have low flow indicators, shall have an arrow on the case to indicate the direction of flow, and each meter shall have the manufacturer's serial number stamped on the register lid.

3. *Meter Vaults:*

(a) *General:* No sweated fittings are allowed underground. Sweated fittings will be allowed inside 1-1/2" and larger meter vaults only. At no time shall mortar touch copper or galvanized pipe. The internal pipe may need bracing to support the valves and meter assembly. Any such bracing shall be approved by the Town. Meter vaults shall be designed, located and installed so as to prevent water, dirt or debris from entering or covering them. If changes in grade at the meter vault are made by the owner or customer after initial construction approval, the cost of the vault adjustment shall be borne by the party responsible for the grade change.

(b) *Two inch meters:* Concrete or masonry floorless vaults shall be provided with 6" minimum stone bedding for 2" meters. The outside shall be waterproofed with a tar based paint, or approved equal. The minimum wall and top thickness for concrete vaults, either precast or cast in-place shall be 4". A 24"x36" aluminum access hatch shall be provided directly over the water meter. The hatch shall be provided with a 1.75" hole, properly plugged, for future installation of a touch read sensor, 2 – 1.75" holes should be provided for compound meter. Vault dimensions and setter requirements shall conform to (See figure TOG-PFM-13).

(c) *Four inch meters and larger:* A masonry or concrete structure shall be used for meters 4" or larger. The outside shall be waterproofed with a tar based paint, or approved equal. Sleeves will be required around the water pipe entering and leaving the vault. The openings around the sleeves shall be sealed against water seepage. A positive drain extending to grade, or a sump pump shall be provided, whichever is more practical. A sump shall be located on the side of the vault with the floor sloping to it. The top shall be made of reinforced concrete or metal with a metal door insert. In any case, the access door must be waterproof, air-tight, 2' x 3' in size, located over the meter, and easy for one person to lift. The door shall be provided with a 1.75" hole, properly plugged, for future installation of a pro-read sensor, a 2" hole should be provided for a compound meter. Doors shall have a lift handle and hinges. (See figure TOG-PFM-14).

G. WATER SERVICE LATERALS

Laterals are to be installed for all lots or parcels of land within the development and shall extend from the main to the property line of the lot or parcel. Typically, such laterals are to be three-quarter (3/4) inch for a single service connection or one (l) inch for a double service connection, type "k" copper tubing, installed at a minimum depth of thirty-six (36) inches from the main line to a meter setting below finished grade. Water service laterals larger than 1", crossing under existing roadways, shall be installed in sleeves of appropriate size and material, as approved by the Town. Meter boxes with coppersetters are to be installed at the end of each service lateral and are to be constructed in such a manner as to prevent conflict with proposed finished grading or other proposed construction such as driveways, drainage ditches, etc. All laterals must be well referenced for future location.

H. BLOW-OFF ASSEMBLIES

Provisions shall be made for blow-offs by means of a regular blow-off assembly or hydrant assembly, as may be directed by the Town. All pipe work for the hydrant blow-off assemblies shall conform in all respects to applicable portions of these specifications. Blow-off assemblies shall not be connected

directly to any storm drain or sanitary sewer systems. Blow-off assemblies shall be placed behind the curb, and shall be required at all dead-ends. (See figure TOG-PFM-15).

Dead-end blow-off assemblies (type A) shall be installed as shown and in accordance with the following specifications:

1. Blow-off lines shall be two (2) inch galvanized pipe.

2. Gate valves and boxes shall be of the type described in the applicable sections of these specifications.

3. If the grade allows, a two (2) inch drain pipe shall be properly installed in the meter box.

In-line blow-off assemblies (Type B) shall be located at major low points in the system as determined by the Town.

I. AIR RELIEF VALVE ASSEMBLIES

Approved automatic air relief valves shall be installed at the high points in the system. Each assembly shall consist of a riser pipe, gate valve, fittings, and a precast concrete manhole cone section (including frame and cover with the word "WATER" cast on it), or approved equal. The riser shall be Type K copper pipe. Fittings shall be brass or bronze. Gate valves shall be an APCO #l43C(l") or #200A(l") air relief valve or approved equal shall be used on lines smaller than twelve (l2) inches in diameter. An APCO #l45C(2") or #200C(2") air relief valve or approved equal shall be used on lines equal to or larger than twelve (12) inches. (See figure TOG-PFM-16).

If the grade allows, a two (2) inch drain pipe shall be properly installed in the cone section of the manhole.

Air relief valve assemblies shall not be connected directly to any storm drain or sanitary sewer systems.

J. FIRE HYDRANT SPECIFICATIONS

Hydrants shall be manufactured in accordance with the most current revision of ANSI/AWWA C-502-85 and shall be approved by the National Board of Fire Underwriters. Hydrants shall have six-inch (6") barrel with 5.25-inch clear opening through the valve and shall be provided with a 4.5-inch pumper connection and two (2) 2.5-inch I.D. hose connections.

Fire hydrants shall be installed in such a manner as to provide the proper fire protection as approved by the County's fire prevention officer to all structures and no hydrant shall be more than 800 feet from any other hydrant measured along the centerline of the public right-of-way, private road, or other applicable access route. Generally, fire hydrants shall be placed no closer than 40 feet nor further away than 400 feet from all major structures.

Hydrants shall be of the frost-proof and non-flooding type which will not flood in case the barrel or valve stem is damaged, with orifices for draining the hydrant when the valve is closed. A safety flange shall be provided so that the barrel will not break if struck by a vehicle or other object, and the hydrant can be repaired without digging. Hydrants shall have a three foot, six inch (3'6") minimum bury and be designed for l50 psi working pressure and 300 psi hydrostatic pressure. All working parts shall be bronze to bronze. All hydrants shall open counterclockwise and be preceded in the line by a gate valve. The pumper connection shall face the roadway. Fire hydrants shall have a moisture proof chamber around operating threads filled with oil or grease which shall lubricate the threads.

Hydrants shall be set plumb with the invert of the pumper connection eighteen (l8) inches above grade. Unless the hydrant location is specifically indicated otherwise, it shall be located so that the center is not less than two (2) nor more than ten (10) feet from the back of the curb of the adjacent street, with the pumper connection facing the street, unless otherwise directed by the fire official. The connecting pipe will have the same depth of cover as the distribution mains. The base and back of the hydrant, opposite the pipe connection, shall be firmly blocked against the vertical face of the trench with cast-in-place concrete to prevent the hydrant from blowing off the line. If the character of the soil is such that in the opinion of the Town the hydrant cannot be securely blocked, bridle rods and rod collars and/or a pipe type bracing shall be used. Bridle rods and rod collars shall not be less than three-quarter (3/4) inch stock and shall be protected by a coat of bituminous paint. Not less than seven (7) cubic feet of broken stone shall be placed around the base of the hydrant to ensure drainage. The backfill around hydrants shall be thoroughly compacted to grade line. Hydrants and valves shall have the interiors cleaned of all foreign matter before installation. Stuffing boxes shall be tightened and the hydrant or valve shall be inspected in open and closed positions, to see that all parts are in working condition. Bags shall be tied securely over all fire hydrants as soon as they are installed. These bags shall not be removed until approved by the Town. Each new fire hydrant shall be freshly painted.

The threads on the 4.5-inch pumper (steamer) connection and on the operating nut shall be National Standard threads. The threads on the hose connections shall be, 3 21/64" female, 3 9/32" male, eight threads per inch (Gauge 8-322) National Standard threads. All threads shall be thoroughly lubricated with graphite. All of the male connections shall have caps and chains. The cap nuts and the operating nut shall be 1 1/2" Pentagon and shall open counterclockwise.

All hydrants shall be American Darling or approved equal.

K. ACCEPTABLE TESTS

All testing will be performed in accordance with the ANSI/AWWA C600-93 or current revision. The contractor shall provide the Town with forty-eight (48) hours notice prior to undertaking any tests.

1. *Pressure Test:* After the pipe has been laid, all newly laid pipe or any valved section thereof shall be subjected to a hydrostatic pressure of at least 200 psi.

   (a) *Test Pressure Restrictions:* Test pressures shall:

   - not exceed pipe or thrust restraint design pressure;
   - be of at least 2-hour duration;
   - not vary by more than +5 psi;
   - not exceed twice the rated pressure of the valves or hydrants when the pressure boundary of the test section includes closed gate valves or hydrants;
   - not exceed the rated pressure of the valve.

   (b) *Pressurization:* Each valved section of pipe shall be filled with water slowly and the specified test pressure shall be applied by means of a pump connected to the pipe in a manner satisfactory to the Town of Gordonsville. The water and container used to pump up the line to be tested shall be properly disinfected.

   (c) *Air Removal:* Before applying the specified test pressure, air shall be expelled completely from the pipe, valves, and hydrants.

   (d) *Examination:* All exposed pipe, fittings, valves, hydrants, and joints shall be examined carefully during the test. Any damaged or defective pipe, fittings, valves, or hydrants that are discovered following the pressure test shall be repaired or replaced with sound material and the test shall be repeated until it is satisfactory to the Town.

2. *Leakage Test:* A leakage test shall be conducted concurrently with the pressure test.

   (a) *Leakage defined:* Leakage shall be defined as the quantity of water that must be supplied into the newly laid pipe, or any valved section thereof, to maintain pressure within 5 psi of the specified test pressure after the air in the pipeline has been expelled and the pipe has been filled with water.

   (b) *Allowable leakage:* No pipe installation will be accepted if the leakage is greater than that determined by the following formula:

$$L = \frac{SD\sqrt{P}}{133,200}$$

in which L is the allowable leakage, in gallons per hour; S is length of pipe tested in feet; D is the nominal diameter of the pipe, in inches; and P is the average test pressure during the leakage test, in pounds per square inch gauge.

(c) When testing against closed metal-seated valves, an additional leakage per closed valve of 0.0078 gal./hr./in. of nominal valve size shall be allowed.

(d) When hydrants are in the test section, the test shall be made against the closed hydrant valve.

(e) *Acceptance of installation:* Acceptance shall be determined on the basis of allowable leakage. If any test of pipe laid discloses leakage greater than the allowable amount, the contractor shall, at his own expense, locate and repair the defective material until the leakage is within the specified allowance.

(f) All visible leaks are to be repaired regardless of the amount of leakage.

L. DISINFECTION

1. Precautions shall be taken to protect pipe interior, fittings and valves against closed with watertight plugs. If water accumulates in the trench, plugs shall remain in place until the trench is dry. All pipe and fittings shall be kept free of dirt or any foreign material likely to cause contamination.

2. Mains shall be disinfected by the continuous feed method or the tablet method in accordance with AWWA C-651-92 or current revision, except as specified otherwise or approved in writing by the Town.

(a) *Continuous Feed Method:* Potable water shall be introduced into the pipe line at a constant flow rate protected by an approved backflow prevention device. Chlorine shall be added at a constant rate to this flow so that the chlorine concentration in the water in the pipe is at least 50 mg/l. The chlorinated water shall remain in the pipe line at least 24 hours, after which, the chlorine concentration in the water shall be at least 10 mg/l.

(b) *Tablet Method:* Tablets of calcium hypochlorite, containing 70 percent available chlorine by weight, shall be affixed to the top of each section of pipe and in appurtenances by a food grade adhesive such as Permatex Form-a-Gasket #2, Permatex Clear RTV silicone adhesive sealant, or approved equal. Tablets shall not be completely covered by adhesive. After completion of the construction the main shall be filled with water at a velocity of less than one (l) foot per second in accordance with the following schedule:

Schedule of Maximum Flow Rates

Diameter	**Flow Rate**	**Diameter**	**Flow Rate**
4"	40 GPM	14"	500 GPM
6"	90 GPM	16"	600 GPM
8"	160 GPM	18"	800 GPM
10"	260 GPM	20"	1000 GPM
12"	350 GPM	24"	1400 GPM

A minimum concentration of 50 mg/l of chlorine solution shall be in the system at this time. A concentration of 25 mg/l residual chlorine must be present after 24 hours.

Number of Hypochlorite Tablets of 5-G Required for Dose of 50 mg/l (based on three and three-quarters grams of 70% available chlorine per tablet):

Joint Length (ft)	**Diameter of Pipe (in)**					
	2"	4"	6"	8"	10"	12"
13	1	1	2	2	3	5
18	1	1	2	3	5	6
20	1	1	2	3	5	1
30	1	2	3	5	1	10
40	1	2	4	6	9	14

Grams of HTH Powder Required for Dose of 50 mg/l (based on 65% available chlorine in HTH powder):

Joint Length (ft)	**Diameter of Pipe (in)**					
	2"	4"	6"	8"	10"	12"
13	0.6	2.5	5.56	9.88	15.45	22.24
18	0.85	2.5	7.69	13.69	21.39	30.8
20	0.95	3.8	8.56	15.21	23.76	34.22
30	1.43	5.7	12.83	22.81	35.65	51.33
4	1.9	7.6	17.11	30.42	47.53	68.44

The cost of all such testing will be the responsibility of the Contractor. All valves and appurtenances shall be operated while chlorinated water is in the pipe line. After the retention period, the main shall be flushed of the high chlorine water until the water leaving the system shows a chlorine concentration of less than 1 mg/l or no higher than that prevailing in the water used for flushing. After final flushing, two (2) water samples shall be collected 24 hours apart for bacteriological tests. The samples shall be collected at regular intervals not to exceed 2,000 feet throughout the length of the pipe. All bacteriological samples collected following disinfection shall be analyzed by a lab certified by the Virginia Department of General Services, Consolidated Laboratory Services. The results of these samples must indicate the absence of coliform contamination.

Disinfection shall include hydrants and other special pipe, taps and fittings used at connections to existing piping. These shall be thoroughly disinfected before installation. Excavation for such connections shall be kept free from water until the connection is completed and great care shall be exercised to prevent contamination of the pipe and connection fittings. The inside of the existing pipe within three (3) feet of point of connection shall be disinfected by spraying with a solution containing not less than 200 mg/l of chlorine immediately before connection is made. On completion of disinfection the piping shall be flushed thoroughly, and samples shall be taken and tested by a recognized testing laboratory. The water shall be proven safe for human consumption before acceptance of disinfection. Should the samples show the water is unsafe, the piping shall be disinfected until satisfactory tests are obtained.

Note: It is the contractor's and developer's responsibility to ensure their operations do not contaminate the public water supply. If at any time the water in the existing system becomes contaminated, they shall be held financially accountable for any corrective action taken by the Town, as well as for cost of defending and settlement of all claims resulting from his negligence, including, but not limited to, costs and attorney's fees.

PART V

STREET CONSTRUCTION
STORM DRAIN DESIGN

All roadwork, including storm drainage designs, shall conform to Virginia Department of Transportation standards.

PART VI

RESTORATION OF PAVEMENT

A. SCOPE OF WORK

The work includes providing all excavation, backfill and materials and performing all operations in connection with the restoration of pavement.

B. RESTORATION OF PAVEMENT

1. All existing pavement disturbed by the installation of utilities or other buried infrastructure shall be restored as hereinafter specified. Materials and methods of construction shall conform to applicable provisions of the Virginia Department of Highways and Transportation Road and Bridge Specifications. Pavement which shows signs of failure or other defects after completion of restoration shall be removed and replaced by the Contractor at his own expense.

2. Where trenches have been opened in any roadway or street other than those part of the State of Virginia highway system, the pavement shall be restored in accordance with the requirements of the Virginia Department of Highways and Transportation, except that in no case shall the paving restoration be less than required for Class "A" Restoration below.

   (a) *Class "A" Restoration:* The existing paved surface shall be removed to a minimum depth of 1½ inches for at least 8 inches on each side of the trench. The edges shall be cut vertically and horizontally in a smooth line to present a neat appearance. The trench shall be backfilled as specified and the top 18 inches of the trench shall be filled with VDOT 21A base course, and a 3" SM2A surface course. The surface course shall overlap the trench and be bonded to the existing pavement.

3. Concrete curbs, gutters, driveways, and walks shall be restored to the size, type and shape as required to match existing conditions. Damaged sections shall be replaced with complete new sections or squares; patching of damaged sections will not be permitted.

4. Brick, cobble or other types of pavement shall be restored to match the existing pavement.

5. All unpaved roads or traveled rights-of-way shall be restored with a 12-inch minimum soil aggregate surface course, Gradation "C", properly compacted and bonded.

C. MAINTENANCE OF RESTORED PAVEMENT

The Contractor shall maintain at his own expense all refilled excavations and restored pavement in proper condition until the end of the one-year period following the date of final acceptance of the work. All depressions appearing shall be properly refilled, brought to grade and pavement restored. If the Contractor shall fail to do so within a reasonable time after the receipt of written notice from the Town, the Town may refill and restore said depressions and the cost thereof shall be charged to the

Contractor. In case of emergency, the Owner may refill and restore any dangerous depressions without giving previous notice to the Contractor and the cost of so doing shall be charged to the Contractor.

The Contractor shall be responsible for any injury or damage that may result from improper maintenance of any refilled excavation at any time previous to the end of the above mentioned one-year period.

PART VII

CONCRETE

A. GENERAL REQUIREMENTS

All concrete work shall conform to this section and to the latest edition ACI 318 - Building Code Requirements for Reinforced Concrete. In addition, the following codes, specifications, and standards shall apply where applicable:

(1) ACI 301 – Specifications for Structural Concrete for Buildings.

(2) ACI 302 – Recommended Practice for Concrete Floor and Slab Construction.

(3) ACI 305R – Hot Weather Concreting.

(4) ACI 306 – Recommended Practice for Cold Weather Concreting.

(5) ASTM C-33 – Concrete Aggregate.

(6) ASTM C-94 – Ready-Mixed Concrete.

(7) ACI 315 – Manual of Standard Practice for Detailing Reinforced Concrete Structures.

(8) AWS D1.4 – Structural Welding Code – Reinforced Steel.

(9) CRSI - Concrete Reinforcing Steel Institute – Manual of Practice.

(10) CRSI 63 – Recommended Practice for Placing Reinforcing Bars.

B. MATERIALS

1. *Concrete:* Concrete for structures shall be proportioned and mixed in accordance with the Road and Bridge Specifications, Virginia Department of Highways and Transportation, Current Edition, General Use Concrete, Class A3.5. Concrete for miscellaneous purposes such as fill concrete, thrust blocks, concrete encasement, etc., shall have 28 day compressive strength of 2500 psi. The mix proportions and test data for this concrete shall be submitted to the Town for approval.

   Cement shall be Type II Portland cement manufactured in accordance with ASTM C150.

2. *Steel Reinforcement:* Reinforcement bars shall be deformed new billet steel conforming to ASTM A615-40. Bars shall be formed to the dimensions indicated on the approved drawings. The Contractor shall submit shop drawings to the Town for approval.

3. *Wire Reinforcement:* Welded wire fabric shall conform to ASTM A185.

4. *Curing Compound:* Curing compound shall conform to ASTM C309, Type 2.

5. *Joint Filler:* Expansion joint material shall be preformed and shall conform to AASHO M213.

6. *Joint Sealant:* All concrete joints shall be prepared as shown on the approved drawings and sealed with an approved joint sealant compound.

7. *Water stops:* Flexible water stops shall be manufactured from virgin polyvinyl-chloride compound which conforms to the Corps of Engineers' Specifications CRD-C572. Water stops shall be capable of withstanding a head of water equal to the depth of installation or 30 feet, whichever is greater.

8. *Admixtures and Coatings:* Where indicated on the approved plans, approved admixtures and coatings shall be used.

C. SLUMP

Slump shall be from 2 to 4 inches and will be determined in accordance with ASTM C143. Samples for slump shall be taken from the concrete during placement in the forms.

D. TESTING

The 28 day compressive strengths will be verified during the progress of the work by testing standard concrete cylinders. Three cylinders shall be required from each item of work or from each 50 cubic yards of concrete placed. The Contractor shall furnish the necessary labor and facilities for taking the samples and handling and storing the cylinders at the work site. The Town will mold, ship and provide for the testing of cylinders. The making, curing, and testing of the specimens will be in accordance with ASTM C31 and C39. For the first 24 hours after molding, the cylinders shall be kept moist in a storage box constructed and located so that its interior air temperature will be between 60 and 80F

Should the concrete specimens fail to meet the required compressive strengths, the Town may require sample cores to be cut from the suspect concrete, load testing per ACI 318, or the installation of additional support or removal of work, all at the Contractor's expense.

E. FORMS

All concrete shall be formed. Forms shall be true to line and grade and shall be mortar-tight. All exposed joints, edges and external corners shall have ¾ inch chamfer. Forms shall be of wood, plywood, or steel. Form design shall be approved by the Town, but adequacy of ties, supports, etc. shall remain the responsibility of the Contractor. Embedded wall ties shall be set 1.5 inches from exposed concrete surfaces. In conventional thickness walls, the heights of forms for each vertical lift shall not exceed 10 feet. Forms for continuous surfaces shall be fitted over the completed surface to assure accurate alignment and to prevent leakage of mortar. All forms shall be constructed to allow the forms to be removed without damage to the concrete. Prior to the placing of the concrete, the contact

surfaces of forms shall be cleaned and coated with a non-staining oil.

Forms for columns, walls, sides of beams and other members not supporting the weight of concrete may be removed 36 hours after placement of the concrete. Forms for beams, girders and slabs shall remain in place until the concrete has obtained its required 28 day strength. Reshoring of such members will only be permitted for just cause and after review and approval by the Director.

F. PLACING REINFORCEMENT

Steel reinforcement bars shall be placed in accordance with the approved plans or shop drawings and shall be supported by concrete blocks or metal chairs and shall be securely held in place to prevent dislocation during concrete placement. Reinforcement shall be free from loose rust, mill scale, oil or grease or other material that would destroy proper concrete bond.

G. DELIVERY OF CONCRETE

Concrete placing equipment and methods shall be subject to approval. Each truck load of ready-mixed concrete shall be accompanied by a ticket indicating mix design, mix starting time, and batch weights. No concrete that has been in the ready mix truck longer than 2 hours when the temperature is less than 80F. and 1.5 hours when the temperature is greater than 80F. shall be placed.

H. CONCRETE PLACEMENT

Concrete placing equipment and methods shall be subject to approval. Poor quality subgrades which would contaminate the concrete shall be covered with building paper or other approved material. All surfaces upon which concrete is to be placed shall be thoroughly cleaned and dampened. At contact surfaces between old and new concrete, a one inch layer of cement-sand grout 1:3 by weight shall be placed. The maximum free fall of concrete during placement shall be 6 feet. Chutes, slides or other approved methods shall be used for greater heights.

Concrete shall be placed in 12 to 18-inch horizontal layers as near as possible to its ultimate position and shall be worked around the reinforcement and embedded fixtures and into the corners of forms with care being taken to avoid segregation. Cold joints between successive layers shall be avoided. Concrete shall be placed in the dry and placement will not be permitted during adverse weather conditions. Concrete shall not be placed under water. Without specific authorization, concrete shall not be placed when the air temperature is less than 40F.

I. VIBRATION

All concrete shall be properly consolidated using internal mechanical vibrators supplemented by hand tamping and spading. Vibrators shall have vibratory elements with a frequency of at least 7000 impulses per minute when submerged in the concrete. Vibrators shall not be used to transport concrete in the forms. Vibration of forms and reinforcement shall not be permitted. Where concrete is placed in more than one lift, the vibrator shall penetrate into the previous lift to prevent formation of cold joints.

J. CONSTRUCTION JOINTS

Construction joints shall be provided where indicated on the approved plans but in no case shall construction joints on wetted surfaces be located within two feet of design water level. Construction joint surfaces shall be thoroughly cleaned prior to concrete placement. All laitance, coatings, stains, debris and other foreign material shall be removed from the surface, and the surface shall be broomed with neat Portland cement grout immediately prior to placing new concrete.

Water stops and shear keys shall be provided at construction joints where indicated. Joints in metal water stops shall be brazed, soldered or welded. Joints in rubber water stops shall be vulcanized.

Water stops shall be installed so as to form a continuous watertight seal in each joint. Shear keys shall be installed for ease of removal of the form. Blockouts for pipe sleeves, if approved, shall be provided with key way and water stops and shall be detailed as a plug.

K. SURFACE FINISHING

Surface defects shall be repaired immediately after form removal. Honeycombed and other defective concrete shall be removed to sound concrete. Form ties, tie wire and other loose hardware shall be removed from the concrete surface and tie holes and all damaged surfaces shall be cleaned, dampened and patched with an approved fast setting nonshrink patching mortar. Patched surfaces shall be water cured and patches shall be flush with adjacent concrete surfaces. Finishing or exposed surfaces shall be as required by the Town.

L. PROTECTION AND CURING

Concrete shall be protected adequately from injurious action by the sun, rain, flowing water, frost and mechanical injury, and shall be accomplished by water curing or by application of curing compound, except that compound shall not be used on surfaces to be rubbed or where its appearance would be objectionable or where coverings are to be bonded to the concrete. Vertical wall forms shall be kept continuously wet while the forms are in place.

PART VIII

CLEARING, GRUBBING AND EROSION CONTROL

Clearing, grubbing and erosion control shall conform to Orange County soil and erosion control regulations.

PART IX

DETAIL SKETCHES

TOG-PFM-01 ..... Utility Locations & Easement Widths
TOG-PFM-02 ..... Steel Sleeve Installation Under Roadways
TOG-PFM-03 ..... Steel Sleeve Installation Under Railroads
TOG-PFM-04 ..... Typical Stream Crossing
TOG-PFM-05 ..... Ductile Iron Water Pipe Installation & Bedding
TOG-PFM-06 ..... Concrete Thrust Blocks
TOG-PFM-07 ..... Typical Thrust Block In Fill Area
TOG-PFM-08 ..... Typical Fire Hydrant Assembly Detail
TOG-PFM-09 ..... Typical Gate Valve
TOG-PFM-10 ..... Typical Service Lateral Installation
TOG-PFM-11 ..... Typical Meter Boxes (5/8”-1” Meters)
TOG-PFM-12 ..... Dimensional Typical Meter Detail
TOG-PFM-13 ..... Typical Meter Vault (2” Meter)
TOG-PFM-14 ..... Typical Meter Vault (4” Meter)
TOG-PFM-15 ..... Typical Blow-Off Assembly
TOG-OFM-16 ..... Air Release Valve (ARV)

TOG-PFM-01
Utility Locations & Easement Widths

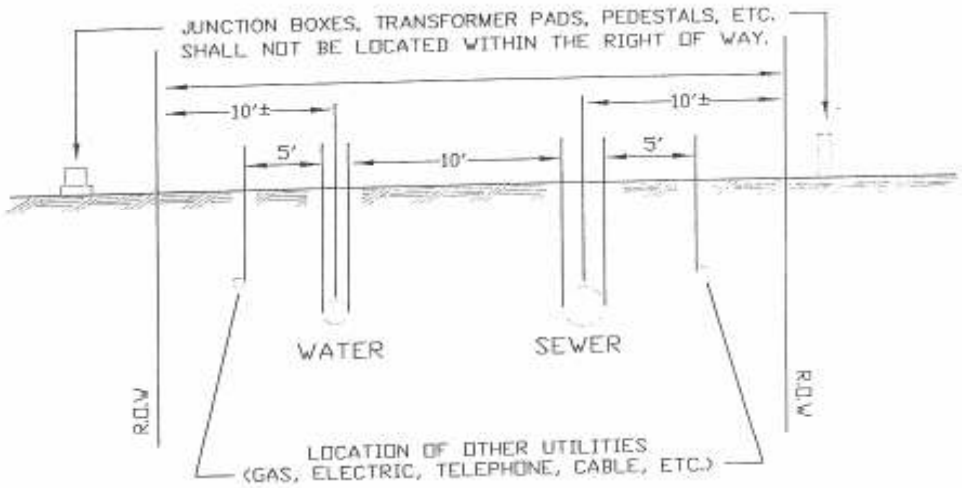

EASEMENT WIDTHS: WATER OR SEWER ONLY – 20' MINIMUM
WATER & SEWER ——— 30' MINIMUM

* SEE PART 3, PARAGRAPH D; SEPARATION OF WATER & SEWER LINES.

UTILITIES CROSSING A WATER OR SEWER EASEMENT SHOULD BE AT 90° TO THE RIGHT OF WAY.

TOG-PFM-02
Typical Steel Sleeve Installation Under Roadways

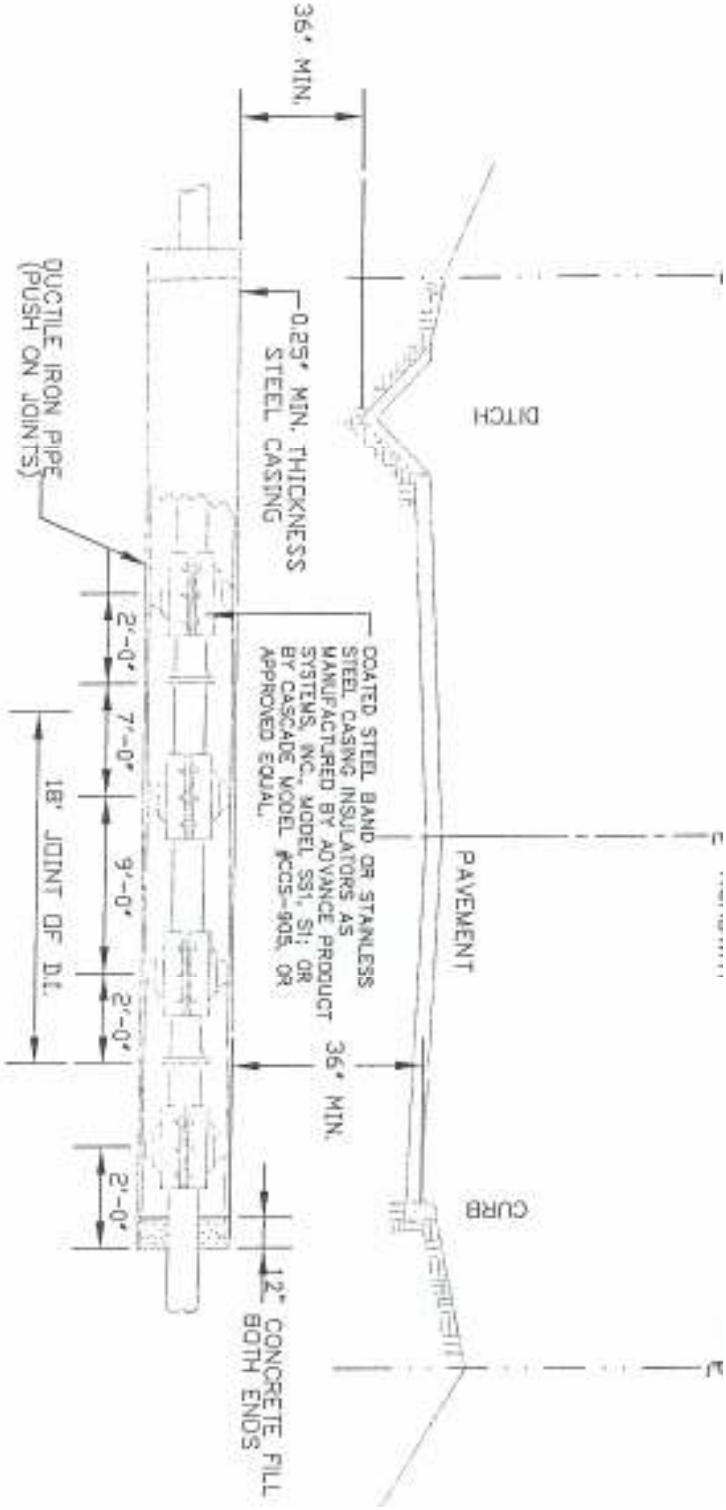

NOTE:
1. STEEL CASING TO EXTEND TO BACK OF CURB, DITCH, SIDEWALK, ETC. OR A MINIMUM OF 5' BEYOND THE EDGE OF PAVEMENT, WHICHEVER IS GREATER.
2. ENDS OF CASING CAN BE SEALED USING A MODEL AC PULL-ON END SEAL GASKET, AS MANUFACTURED BY ADVANCE PRODUCT SYSTEMS, INC., IN LIEU OF CONCRETE FILL.

TOG-PFM-03
Typical Steel Sleeve Installation Under Railroads

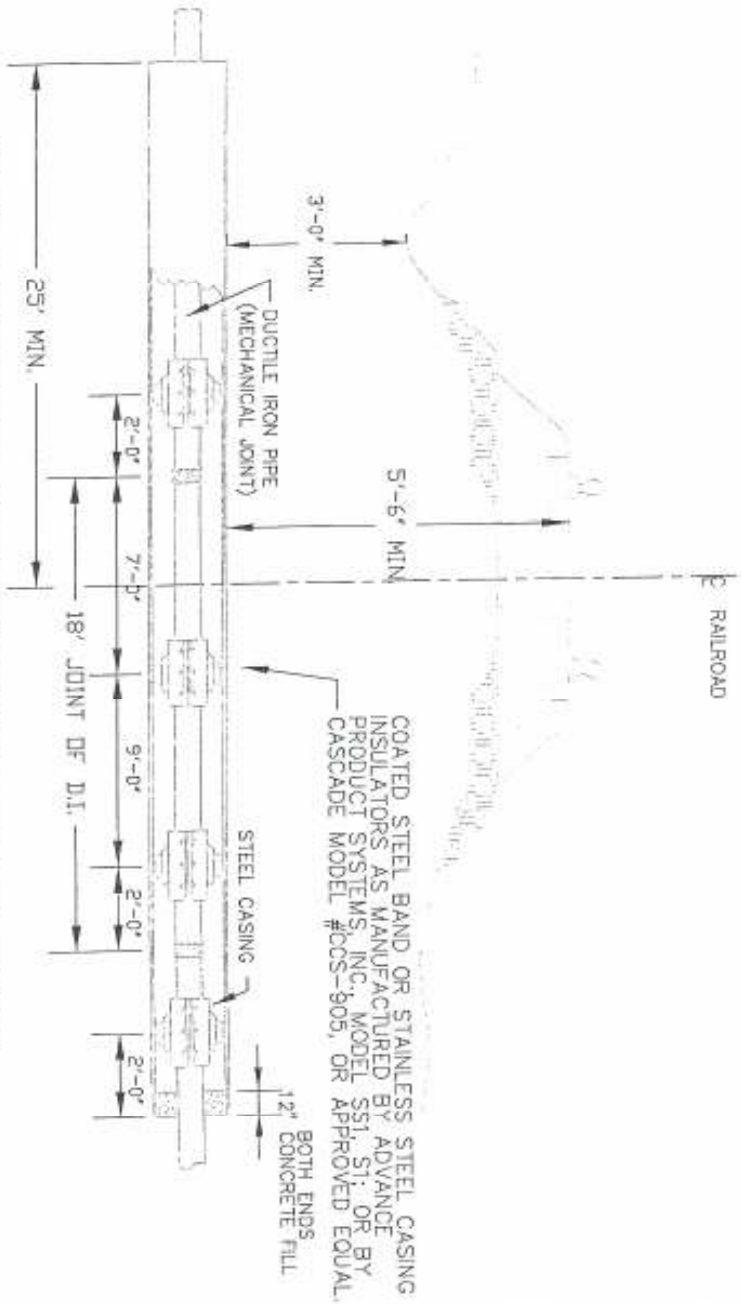

ALSO SEE THE "AREA MANUAL FOR RAILWAY ENGINEERING – PART 5, PIPELINES"

NOTE: 1. ENDS OF CASING CAN BE SEALED USING A MODEL AC PULL-ON END SEAL GASKET, AS MANUFACTURED BY ADVANCE PRODUCT SYSTEMS, INC., IN LIEU OF CONCRETE FILL.

TOG-PFM-04
Typical Stream Crossing

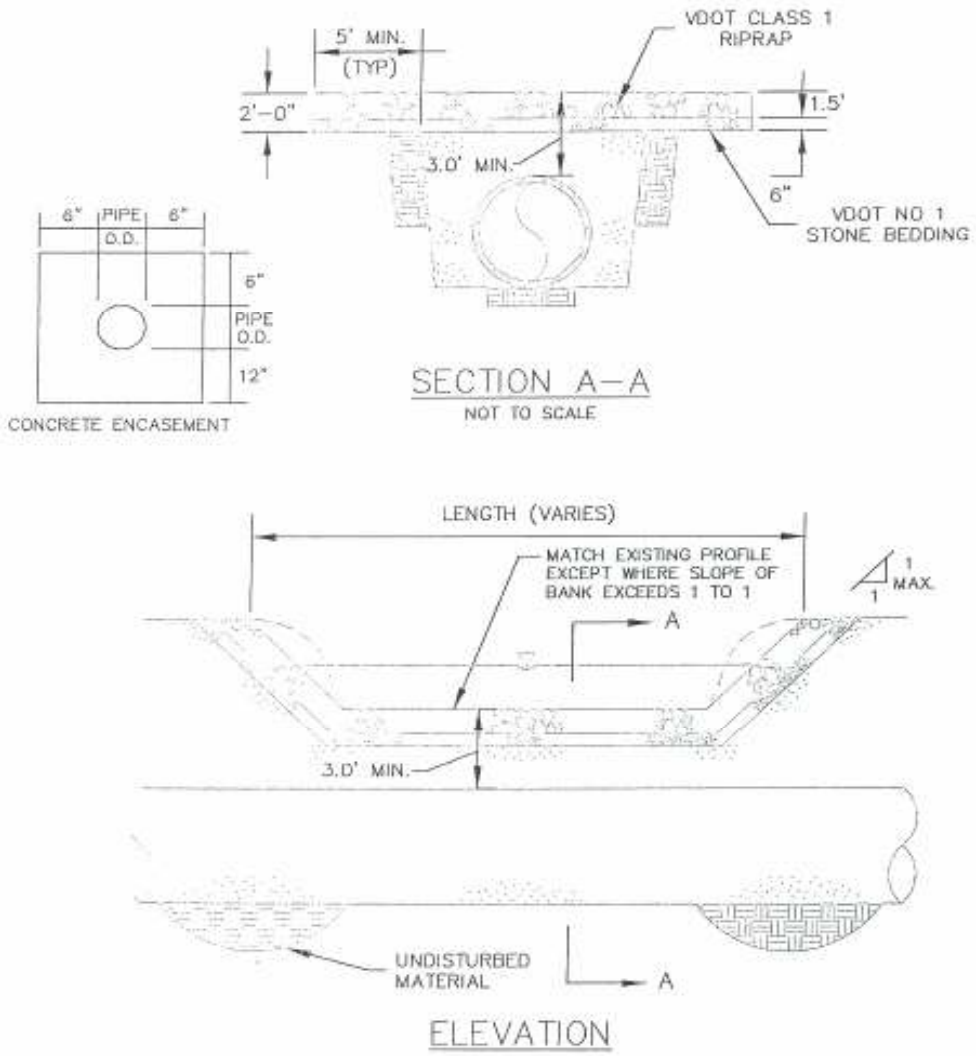

NOTES: 1. WHERE LESS THAN 3' OF COVER IS AVAILABLE BELOW STREAMBED, CONCRETE ENCASEMENT WILL BE REQUIRED.
2. WHEN BEDROCK IS ENCOUNTERED AND COVER EQUALS OR EXCEEDS 3', THE TRENCH SHALL BE BACKFILLED WITH COMPACTED 21A STONE AND TOPPED WITH 18" OF VDOT CLASS 1 RIPRAP.

TOG-PFM-05
Ductile Iron Water Pipe
Installation & Bedding

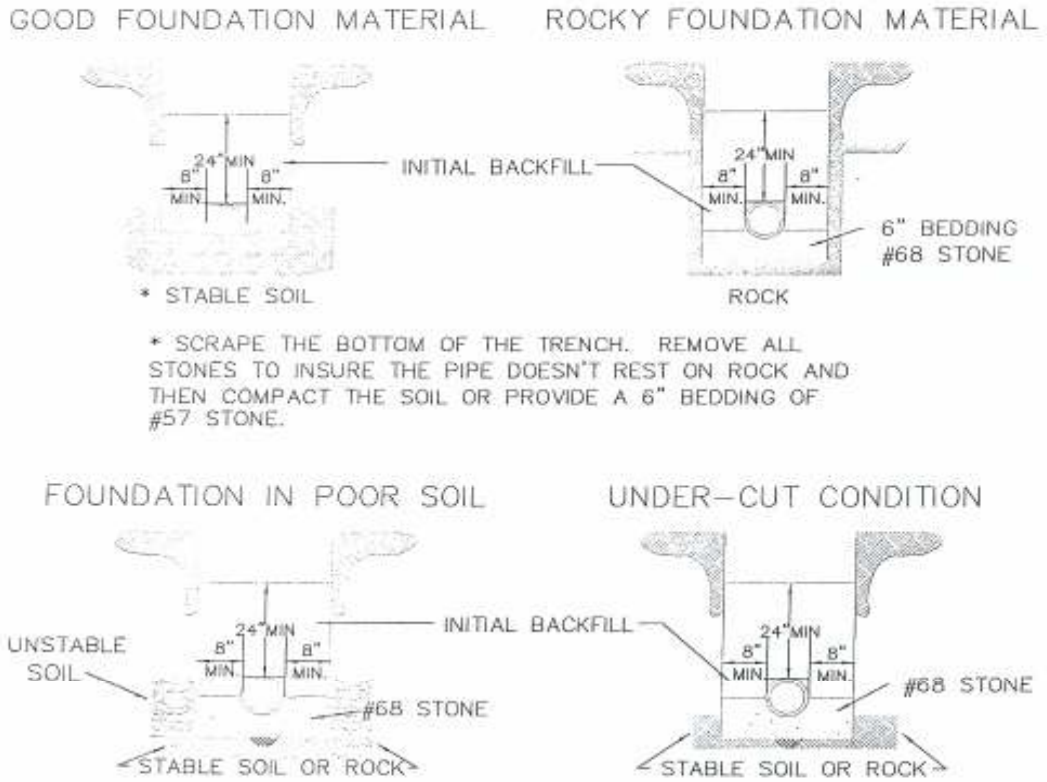

NOTE :

1. NO ROCKS SHALL BE ALLOWED WITHIN INITIAL BACKFILL OF WATER LINES.
2. NO ROCKS LARGER THAN 6" IN ANY DIMENSION SHALL BE ALLOWED ABOVE THE INITIAL BACKFILL.
3. THE INITIAL BACKFILL SHALL BE PLACED AND COMPACTED IN 6" LIFTS.
4. NO ORGANIC OR FROZEN MATERIAL OR DEBRIS SHALL BE ALLOWED IN THE TRENCH.
5. BELL HOLES SHALL BE DUG OUT IN ALL CASES.

TOG-PFM-06
Concrete Thrust Blocks

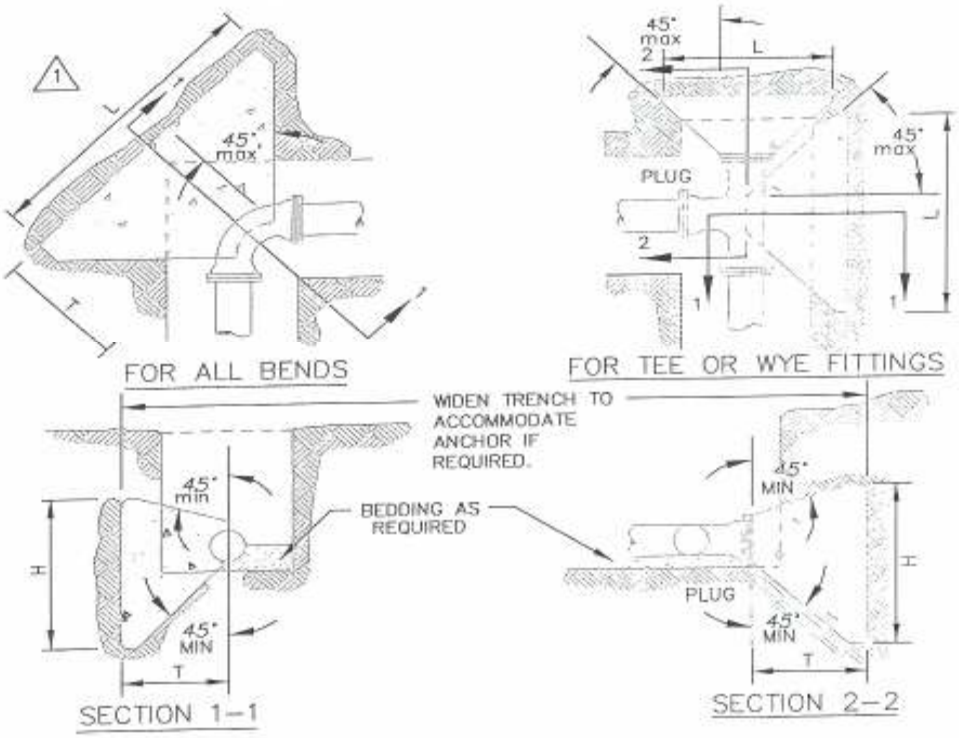

PIPE SIZE	DEGREE OF BEND	BEND DIMENSIONS (FEET)			VOL. CU.YD.	TEE AND PLUGS (FEET)			VOL. CU.YD.
		L	H	T		L	H	T	
4" & 6"	90	2.50	2.50	3.01	0.24	2.00	2.25	2.50	0.15
	45	2.00	2.25	2.60	0.15				
	22 1/2	1.50	2.00	2.52	0.10				
	11 1/4	1.50	2.00	2.50	0.10				
8"	90	3.66	3.16	3.21	0.48	3.16	2.91	2.66	0.32
	45	2.66	2.66	2.77	0.26				
	22 1/2	1.66	2.16	2.69	0.13				
	11 1/4	1.66	2.16	2.67	0.13				
10" & 12"	90	4.83	3.83	3.42	0.83	3.83	4.00	2.83	0.52
	45	3.33	3.58	2.95	0.43				
	22 1/2	2.33	2.58	2.86	0.24				
	11 1/4	1.83	2.33	2.84	0.18				

1. THRUST BLOCKS ARE REQUIRED WHENEVER THE PIPELINE : CHANGES DIRECTION, CHANGES SIZE, DEAD ENDS AND AT VALVES.
2. USE 2500 P.S.I. CONCRETE.
3. NO CONCRETE SHALL BE POURED ON ANY PART OF THE JOINT.
4. THE CONSULTING ENGINEER SHALL BE RESPONSIBLE TO THE VERIFY THE TYPE & SIZE OF ALL THRUST BLOCKS.

TOG-PFM-07
Typical Thrust Block In Fill Area

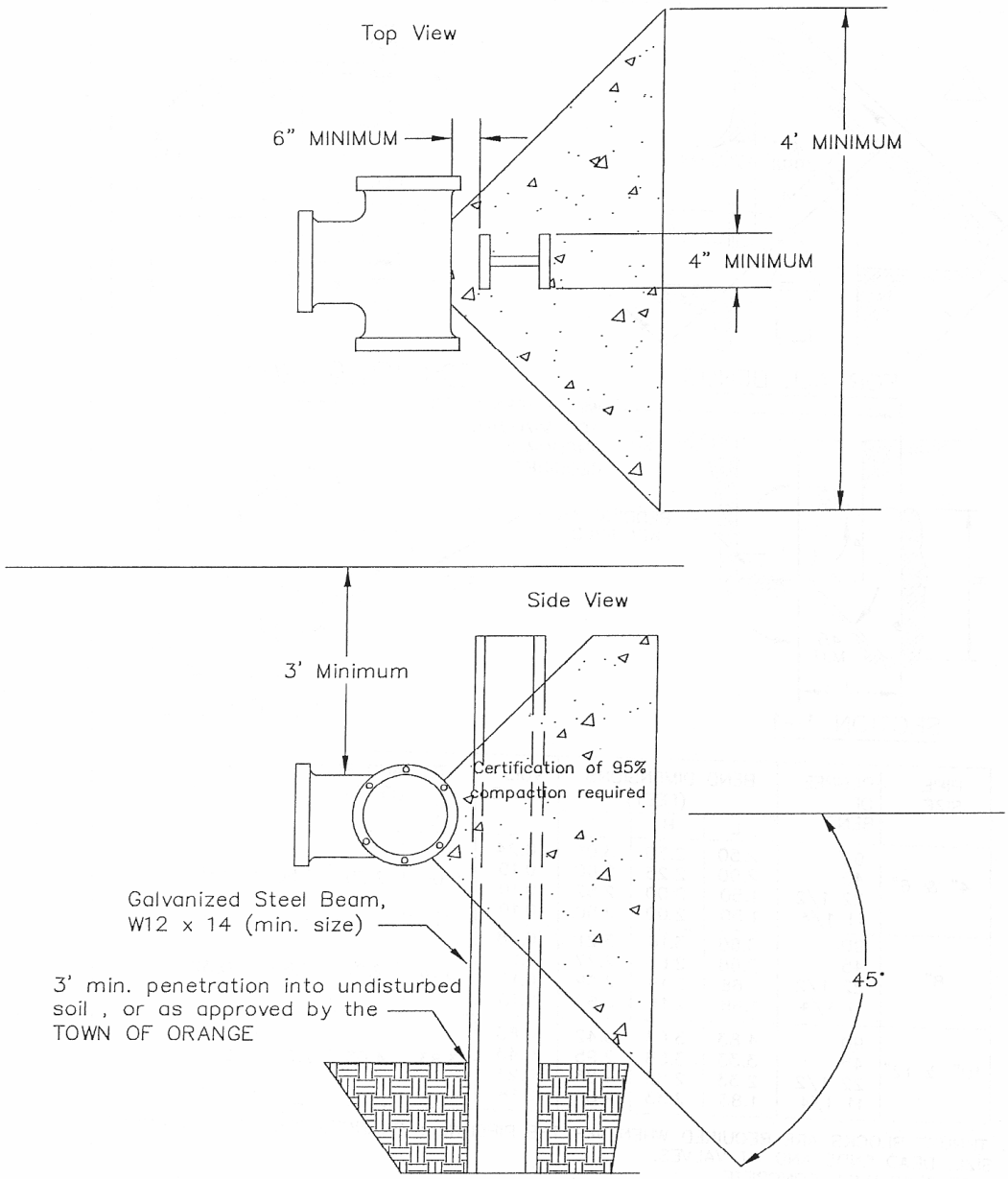

TOG-PFM-08
Typical Fire Hydrant Assembly
(American Darlin or approved equal)

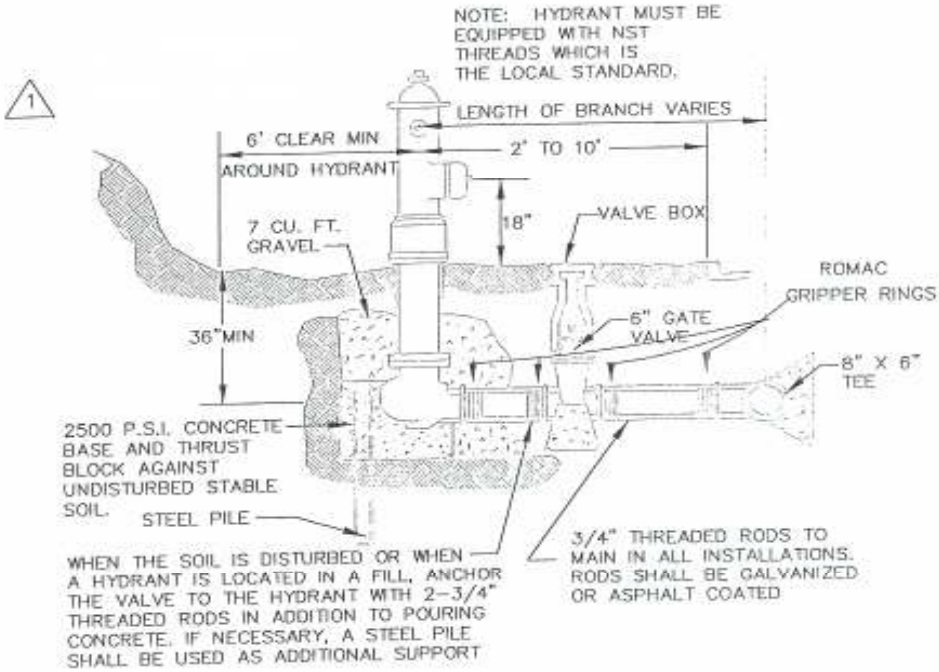

NOTE :

1. SURROUND WEEP HOLES WITH GRAVEL AND KEEP FREE OF CONCRETE.
2. MAINTAIN A 3' MIN. COVER FROM THE MAIN TO THE FIRE HYDRANT (INCLUDING DITCHES)
3. FINISHED GRADE SHALL SLOPE AWAY FROM THE FIRE HYDRANT AND VALVE BOX.
4. THE GATE VALVE IS ALLOWED IN SHOULDER OR BEHIND THE DITCH. IT IS NOT ALLOWED IN THE DITCH.

TOG-PFM-09
Typical Gate Valve
(M.J. Gate Valve & Romac gripper rings or approved equal)

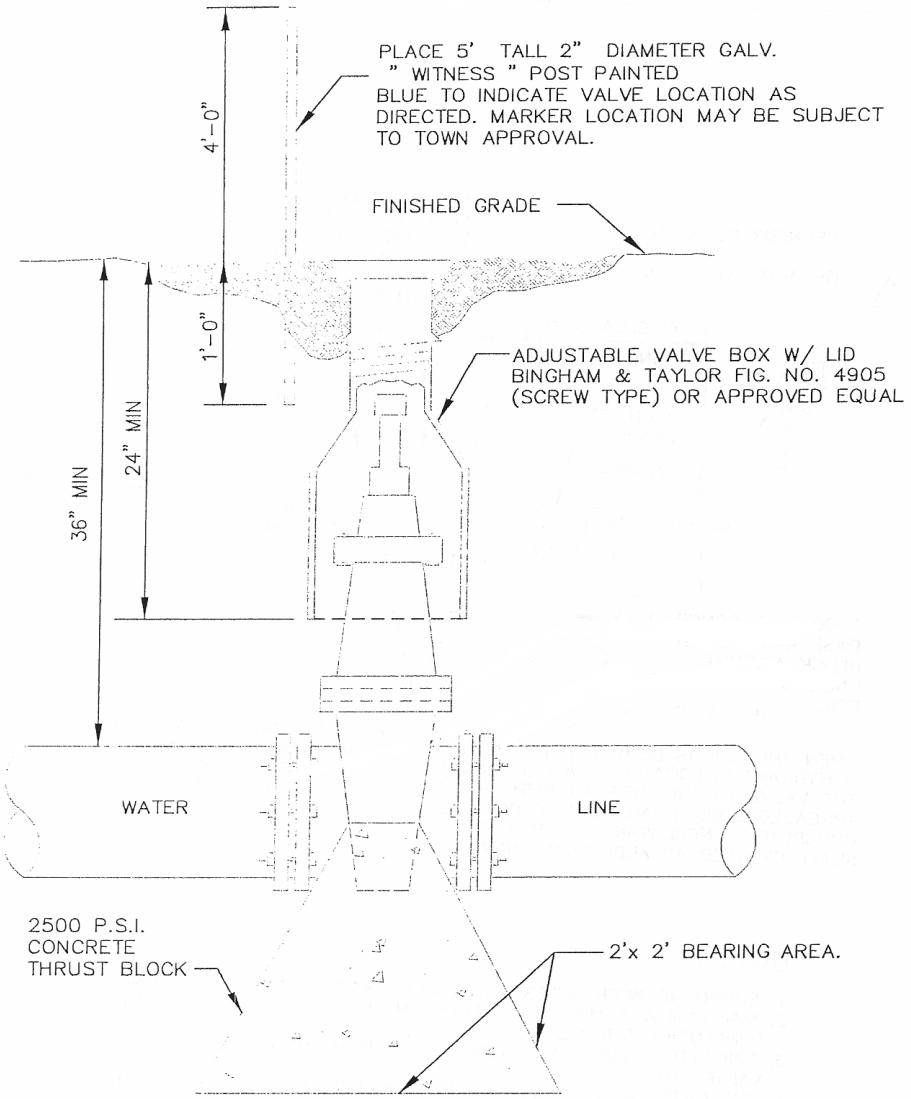

NOTE : IN REMOTE AREAS, VALVE BOXES SHALL EXTEND SIX (6) INCHES ABOVE GRADE.

TOG-PFM-10
Typical Service Lateral Installation
(Ford Coppersetter & Neptune Pro-Read meter or approved equal)

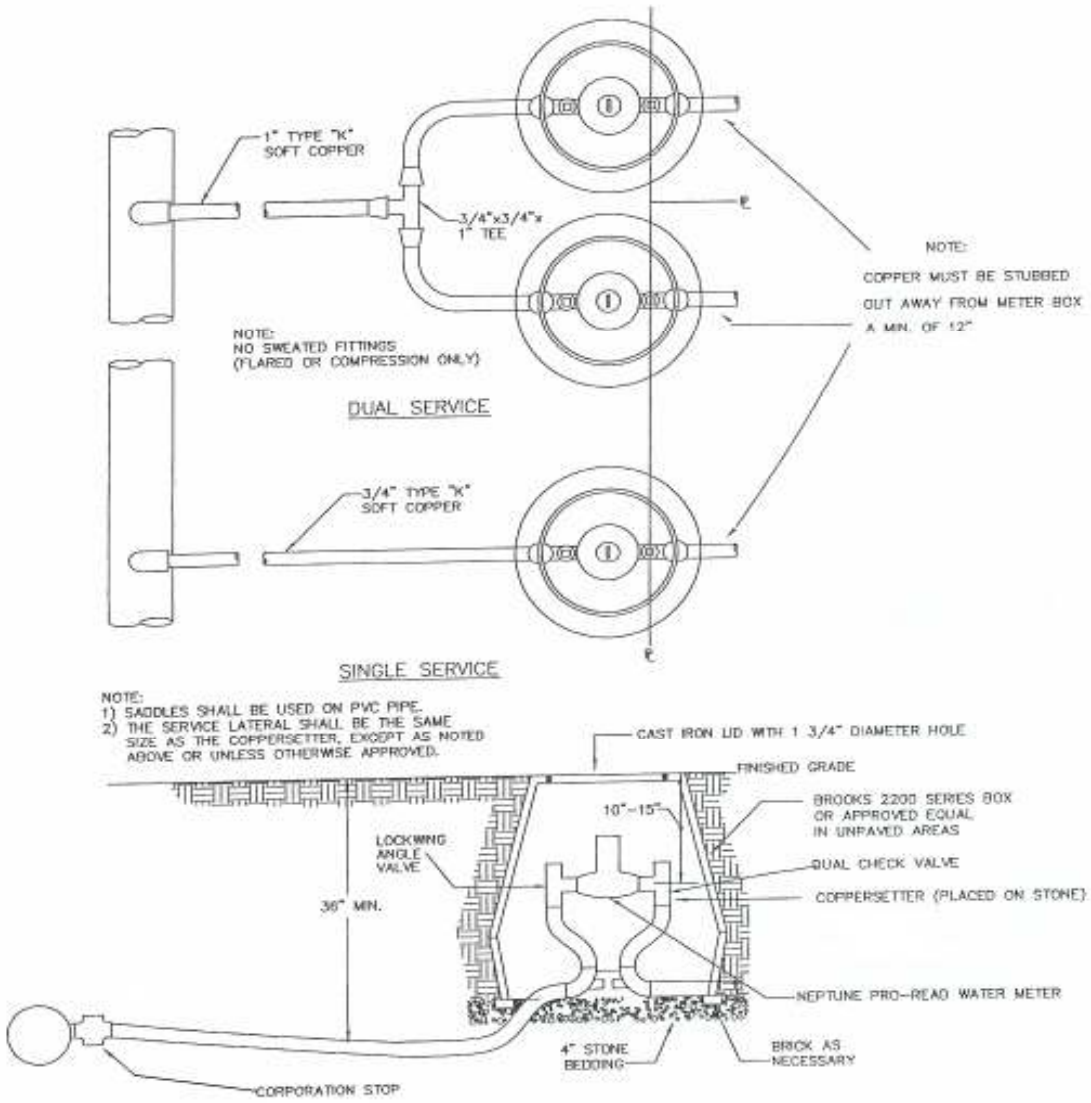

TOG-PFM-11
Typical Meter Boxes (5/8" – 1" Meters

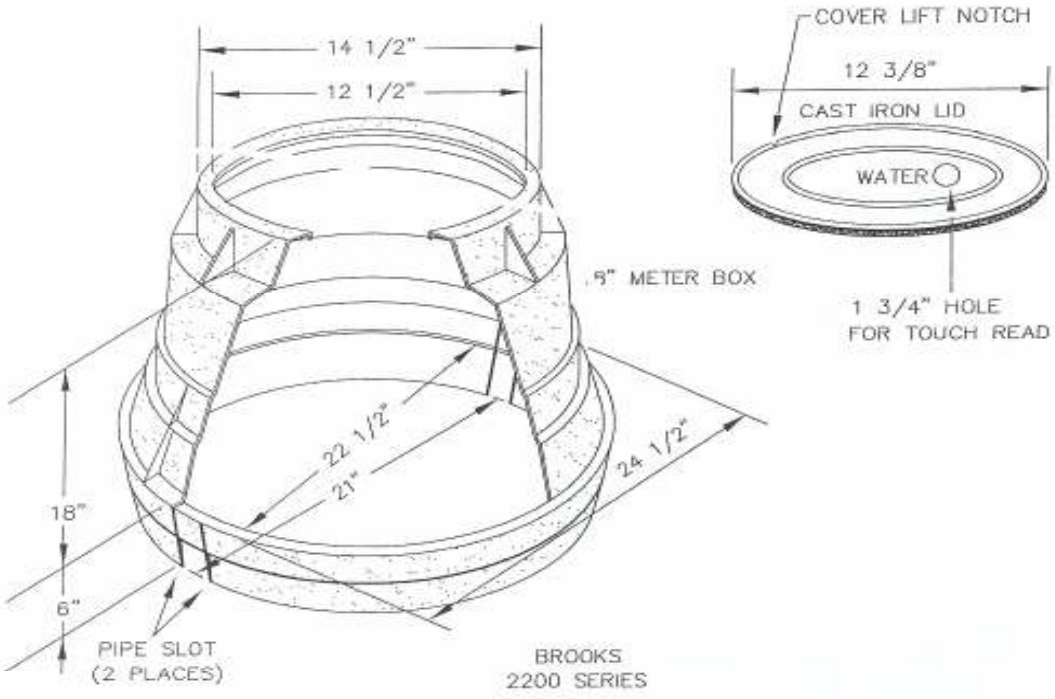

NOTES:
(1) UNPAVED AREAS (PREFERRED LOCATION): PLASTIC BROOKS 2200 SERIES OR APPROVED EQUAL.
(2) PAVED AREAS (ALTERNATE LOCATION): CAST IRON OR APPROVED EQUAL.
(3) FOR TOUCH READ METERS A 1-3/4" DIAMETER HOLE IS REQUIRED IN THE LID.

TOG-PFM-12
Dimensional Typical Meter Detail

METER SIZE	DIMENSION A	DIMENSION B	DIMENSION C
2"	3'1"	5'0"	3'8"
4"	5' MIN.	12' MIN.	6' MIN.
GREATER THAN 4"	PROPOSALS WILL BE SUBMITTED.		

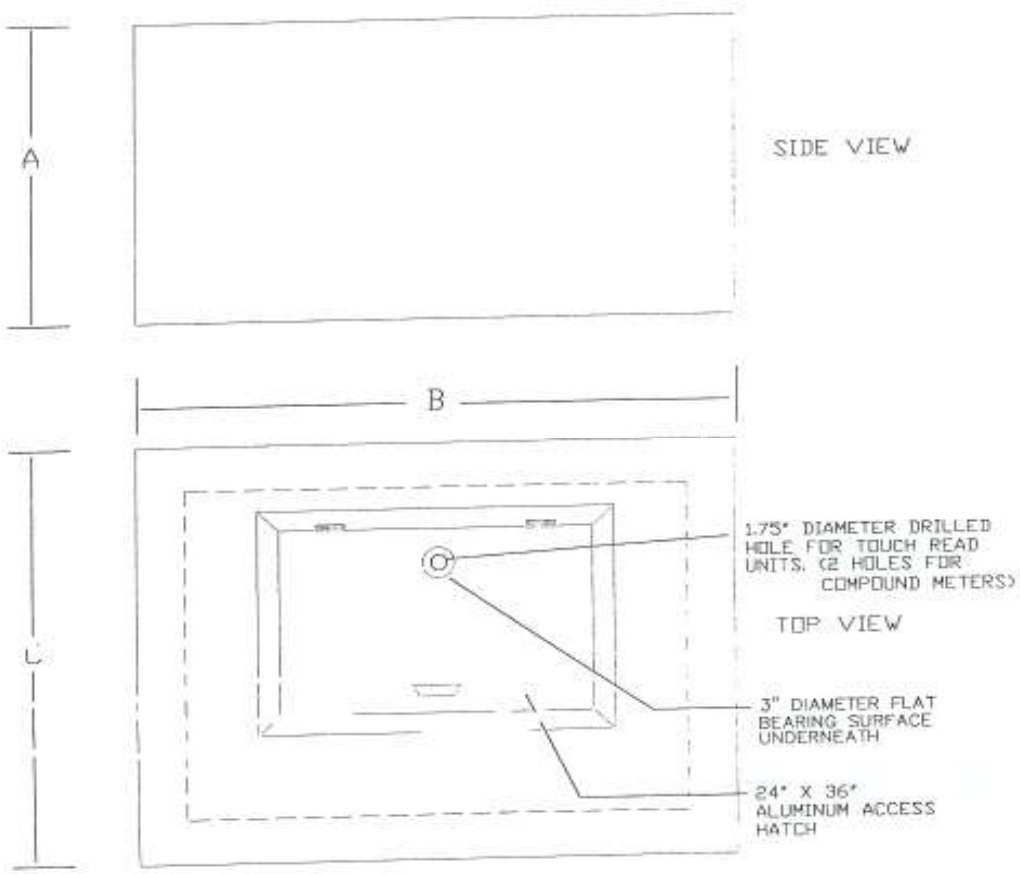

TOG-PFM-13
Typical Meter Vault (2" Meter)

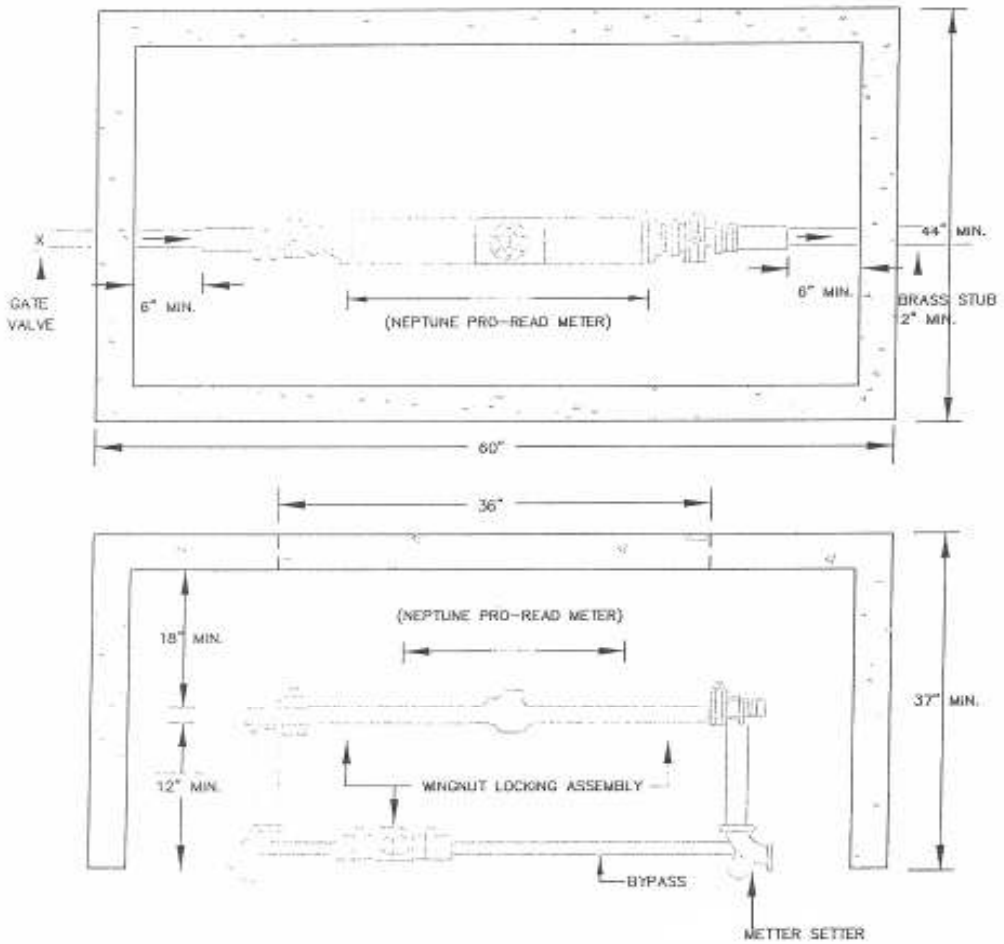

NOTES:

1. PROVIDE A 6" THICK GRAVEL BED BENEATH THE METER VAULT.
2. MINIMUM WALL THICKNESS FOR PRECAST OR CAST-IN-PLACE VAULTS SHALL BE 4". MINIMUM WALL THICKNESS FOR VAULTS CONSTRUCTED OF MASONARY BLOCK SHALL BE 8". CAST INPLACE MUST BE DESIGNED BY A LICENSED ENGINEER
3. THE OUTSIDE OF THE VAULT BELOW GRADE SHALL BE COATED WITH AN APPROVED WATER PROOFING COMPOUND.
4. A GATE VAVLE MUST BE PLACE OUTSIDE THE VAULT ON INLET SIDE

TOG-PFM-14
Typical Meter Vault (4" Meter)

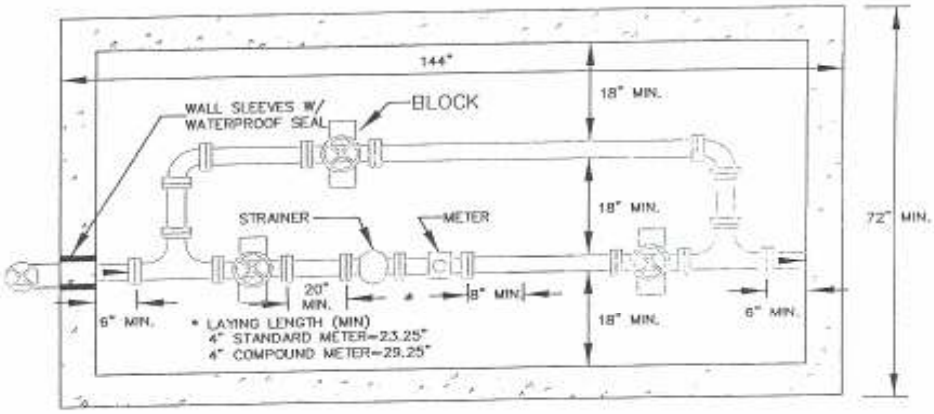

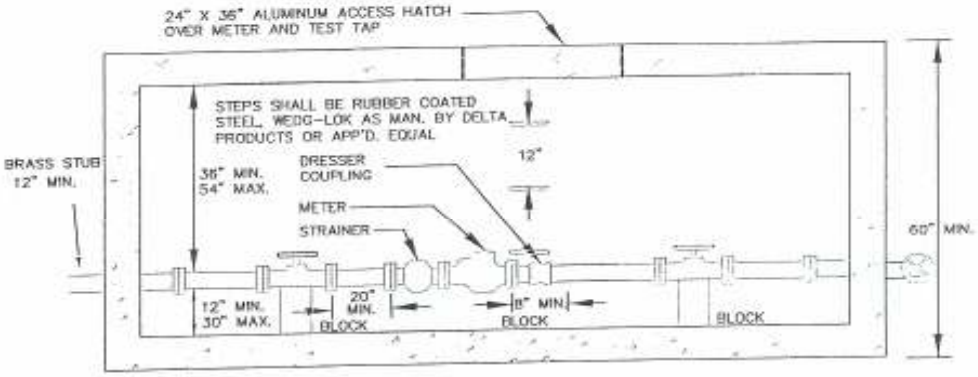

NOTES:

1. MINIMUM WALL THICKNESS FOR PRECAST OR CAST-IN-PLACE VAULTS SHALL BE 4" MINIMUM WALL THICKNESS FOR VAULT CONSTRUCTED OF MASONARY BLOCK SHALL BE 8". CAST IN PLACE MUST BE DESIGNED BY A LICENSED ENGINEER
2. THE OUTSIDE OF THE VAULT BELOW GRADE SHALL BE COATED WITH AN APPROVED WATER PROFING COMPOUND
3. PROVIDE A FLOOR DRAIN WITH A 2" DRAIN PIPE RUN TO DAYLIGHT OR INSTALL A SUMP PUMP. IN EITHER CASE THE FLOOR OF THE VAULT SHALL SLOPE TO THE DRAIN OR SUMP.
4. GATE VALVE MUST PLACED OUTSIDE VAULT ON INLET SIDE

TOG-PFM-15
Typical Blow-Off Assembly

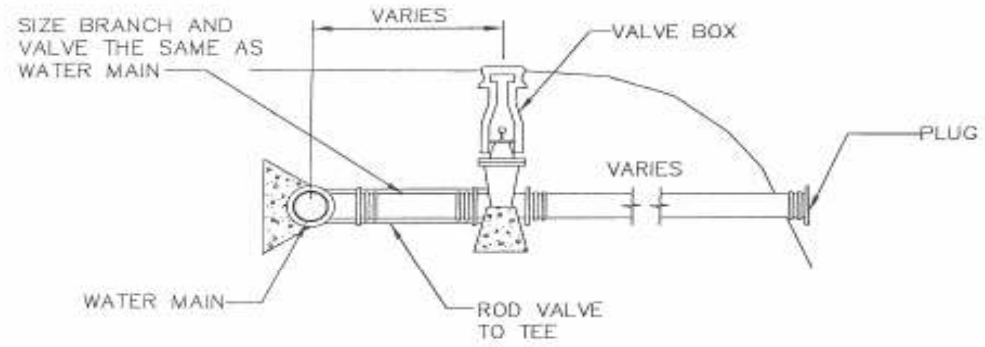

ON–LINE
(TYPE "B")

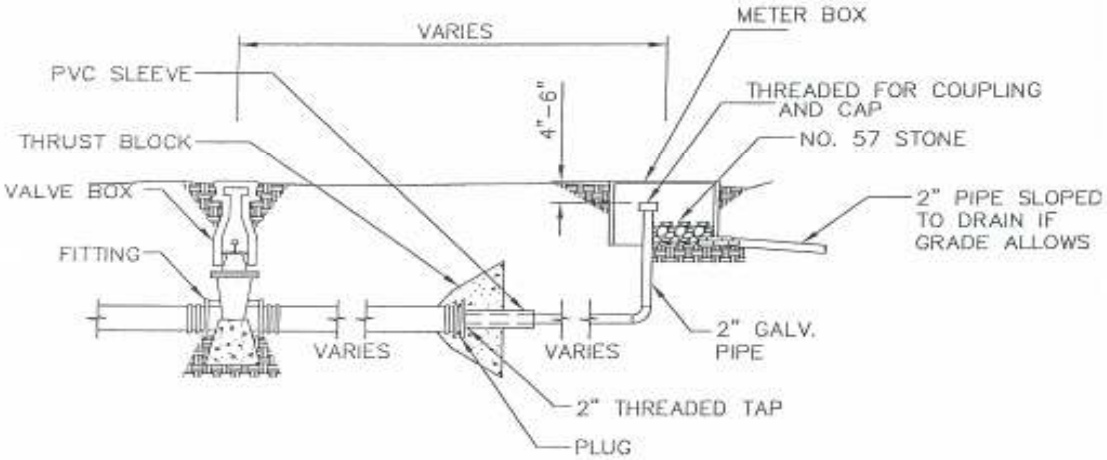

DEAD END
(TYPE "A")

TOG-PFM-16
Air Release Valve (ARV)

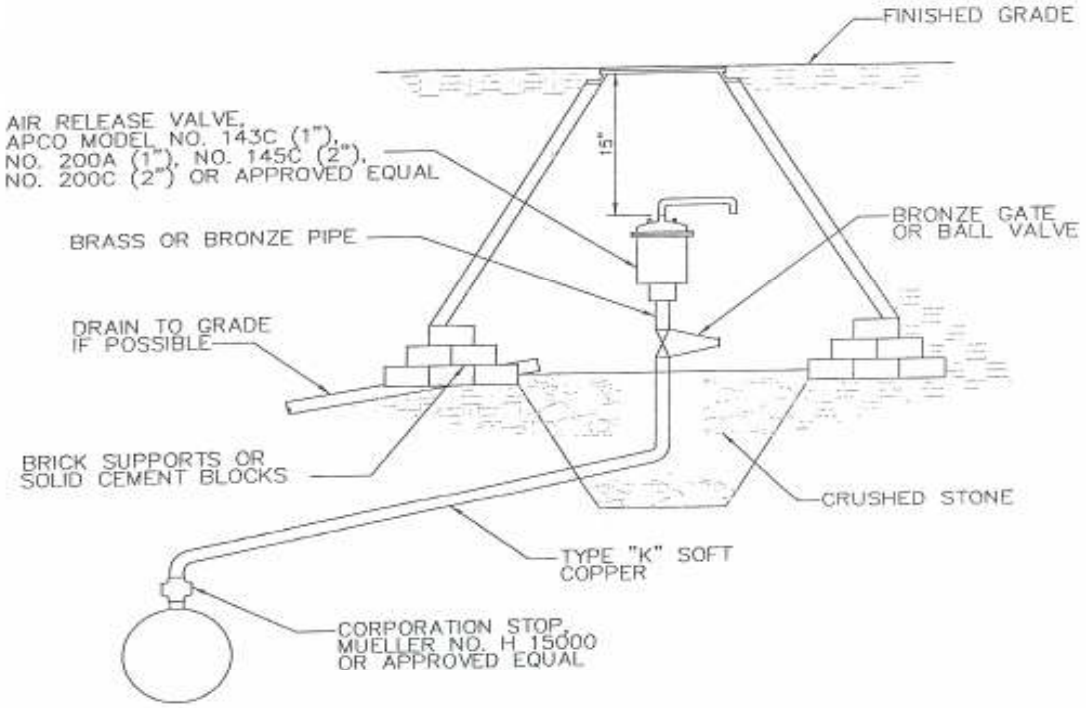

NOTES:

1) A PRECAST MANHOLE CONE AND COVER WITH WATER CAST ON LID, OR APPROVED EQUAL, SHALL BE USED.

2) FOR WATERLINES SMALLER THAN 12" USE A 1" A.R.V. AND FITTINGS. FOR WATER LINES 12" AND LARGER USE 2" A.R.V. AND FITTINGS.

3) IN SITUATIONS WHERE THE A.R.V. ASSEMBLY CANNOT BE OFFSET FROM THE MAIN AN ADEQUATE FOUNDATION SHALL BE INSTALLED SO THE WATER LINE DOES NOT SUPPORT THE MANHOLE CONE.